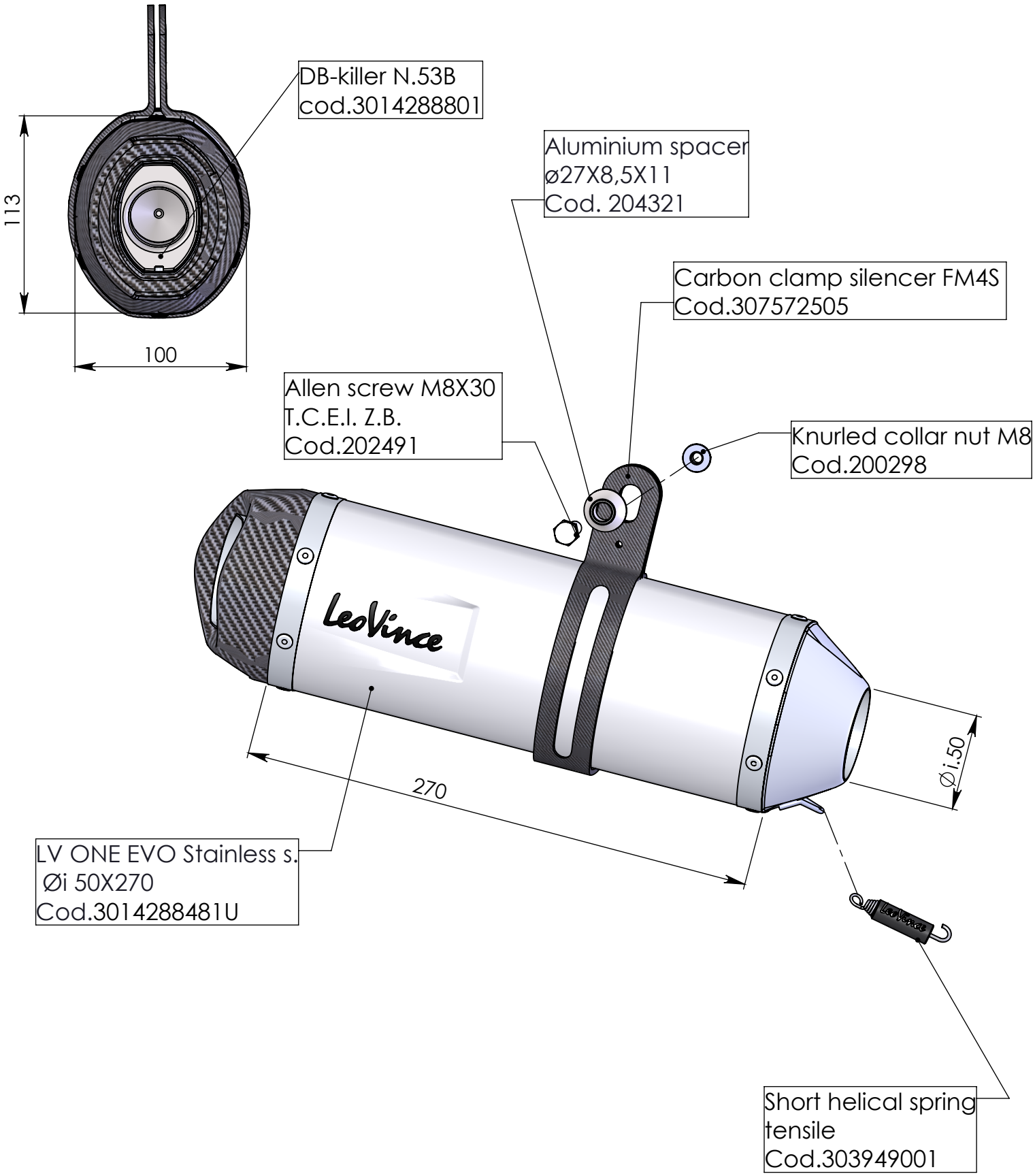

ART. 9775U

MUFFLER KIT - LV ONE EVO - STAINLESS STEEL

FITTING KIT Cod. 309772601