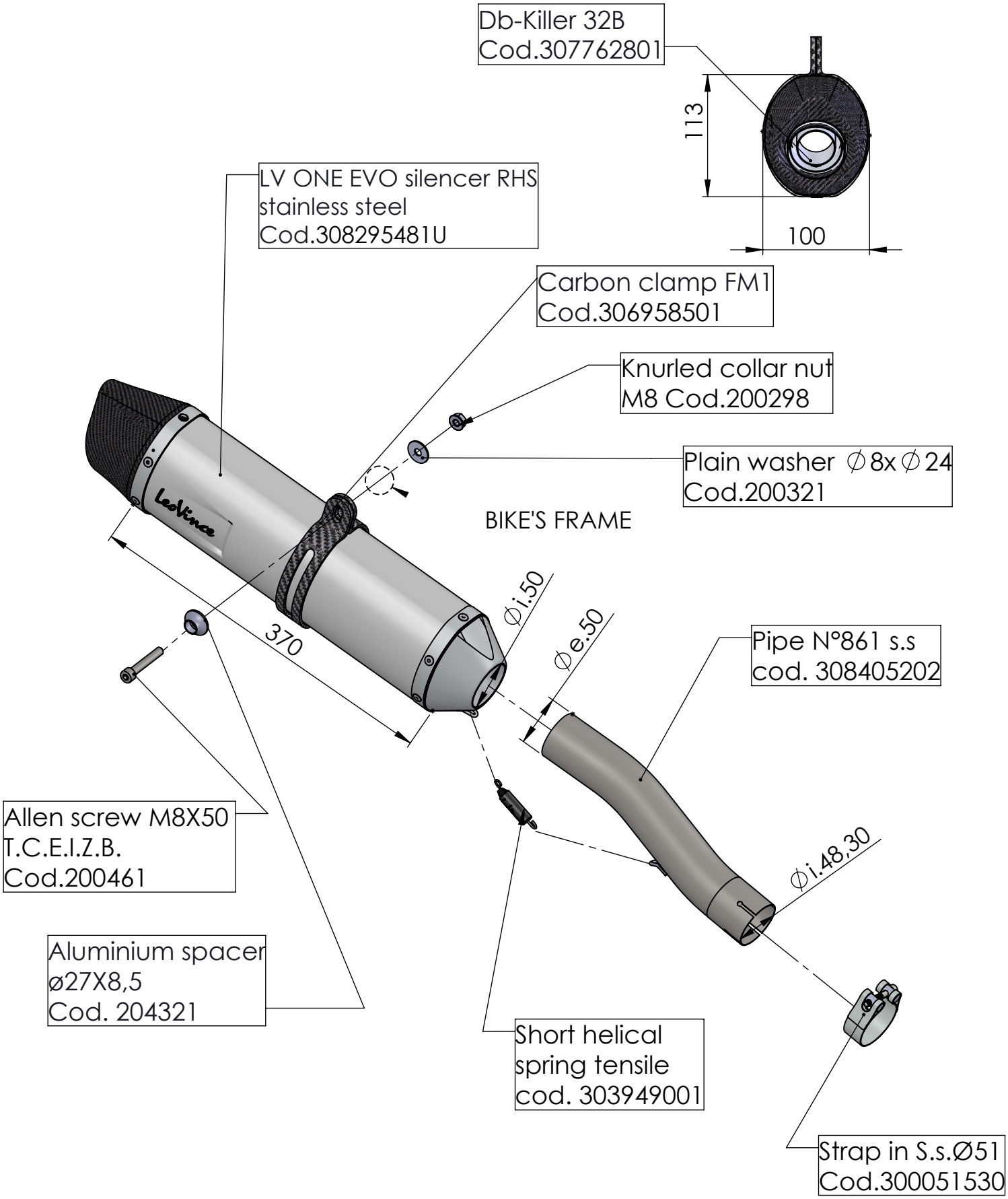

ART. 8404EU

HONDA CBF 1000 - HONDA CBF 1000 ST

SLIP-ON - LV ONE EVO - STAINLESS STEEL