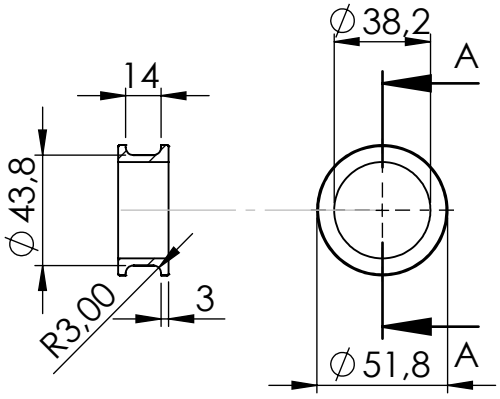

S.S. Bushing
P/N 207105

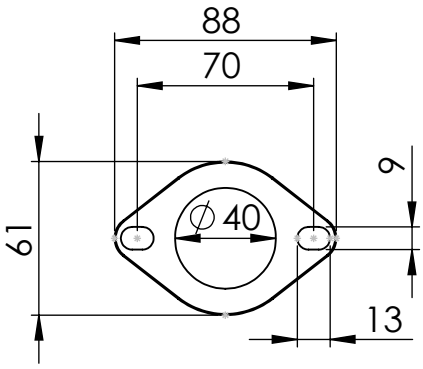

S.S. Flange 38C
P/N 207104

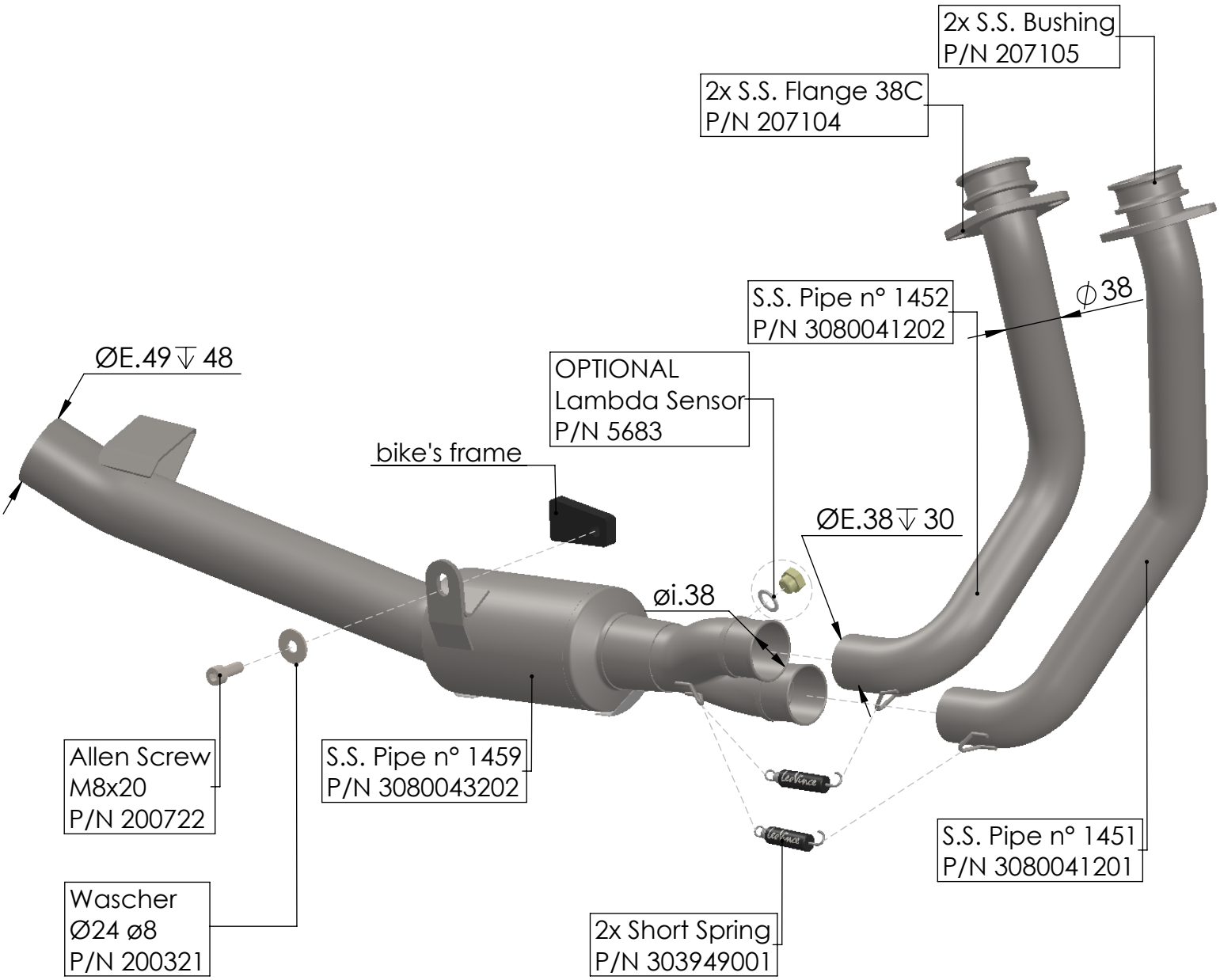

ART. 80043

HONDA XL 750 TRANSALP (also fits 35kW version) (fits with original skid plate, engine guard and center stand) (fits with original panniers)

HEADER PIPES 2/1 - STAINLESS STEEL