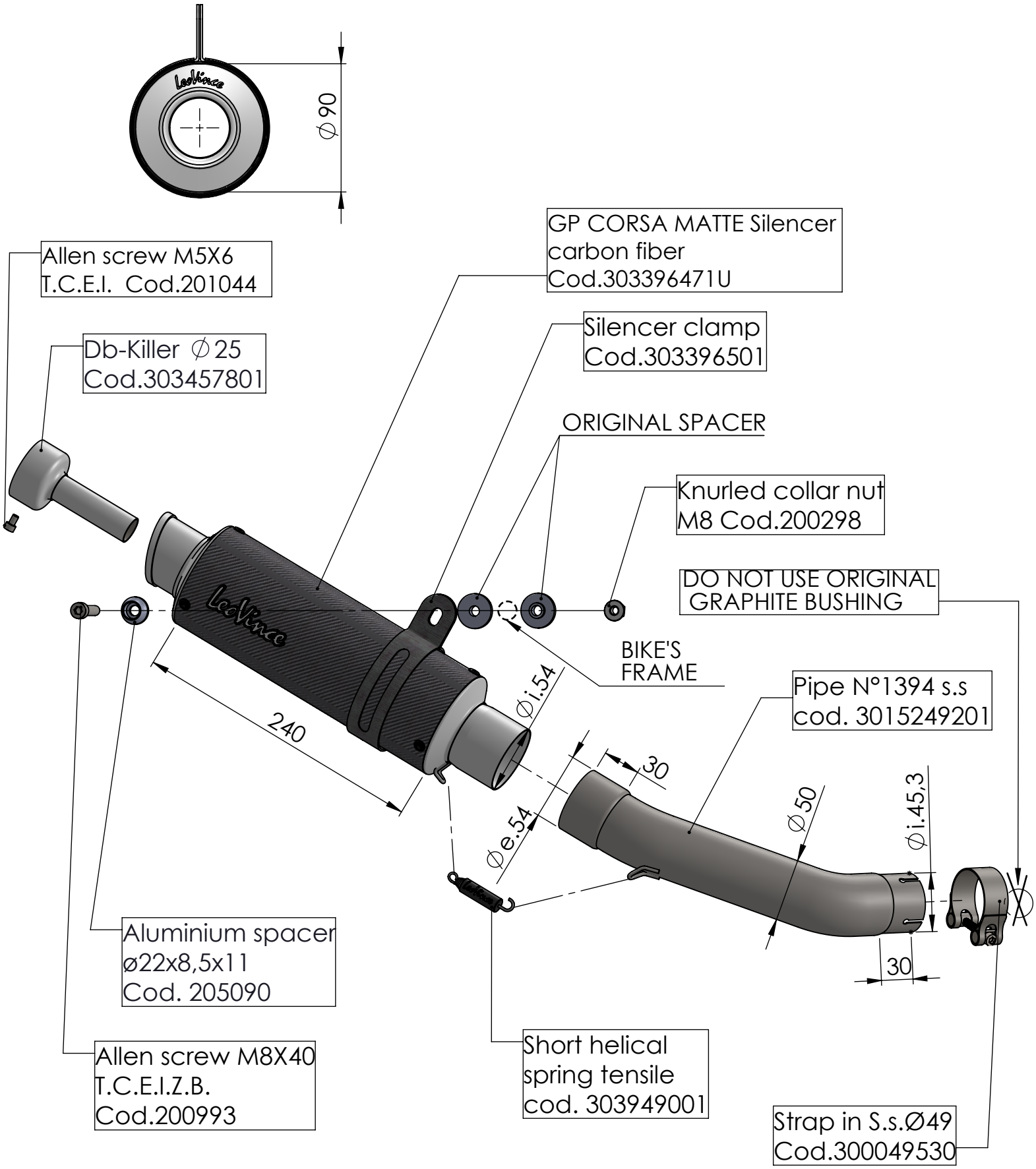

ART. 3399MU

KTM DUKE 125 / DUKE 390

SLIP-ON - GP CORSA MATTE - CARBON