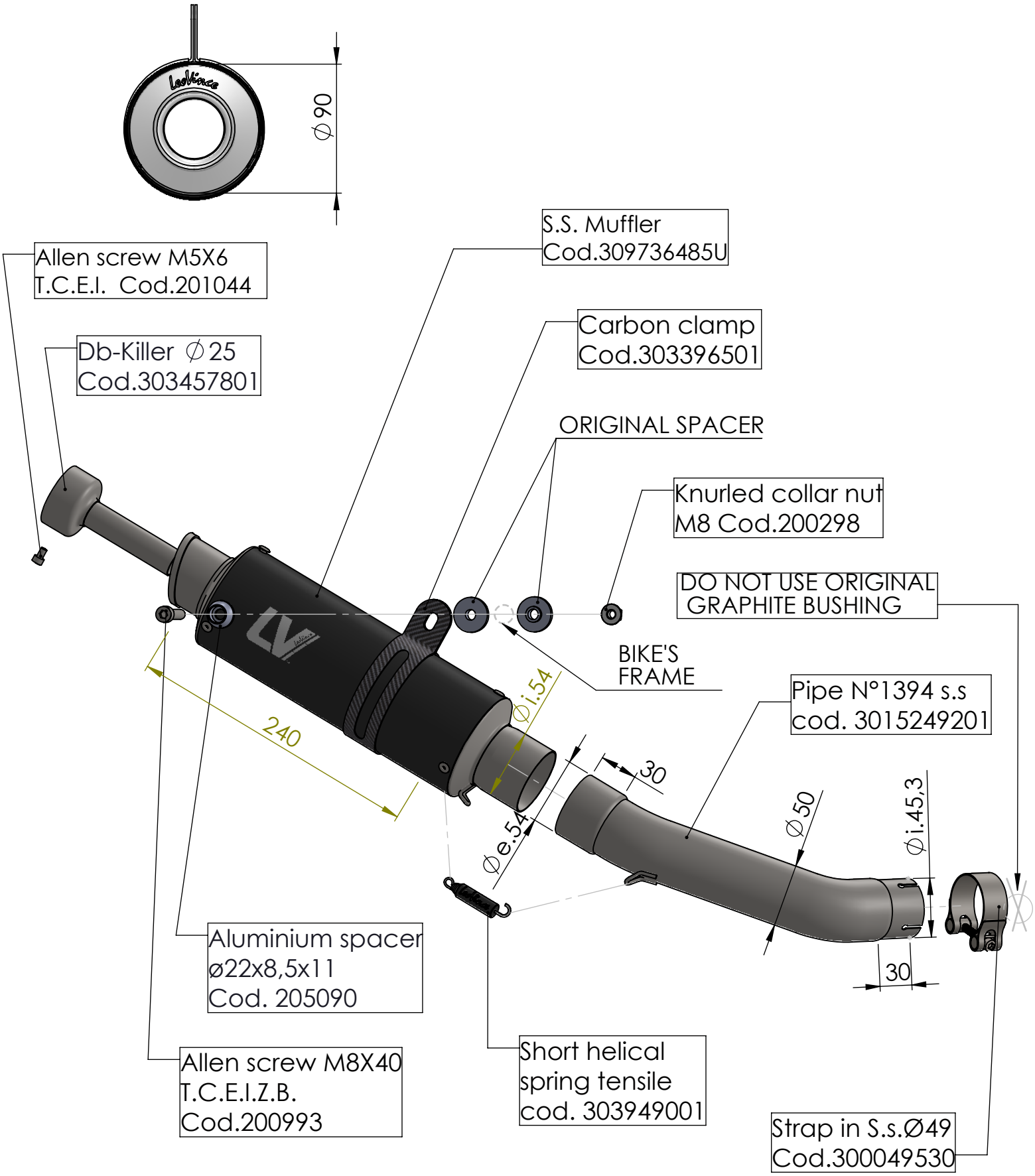

ART. 3399BU

KTM DUKE 125 / DUKE 390

SLIP-ON GP CORSA BLACK EDITION