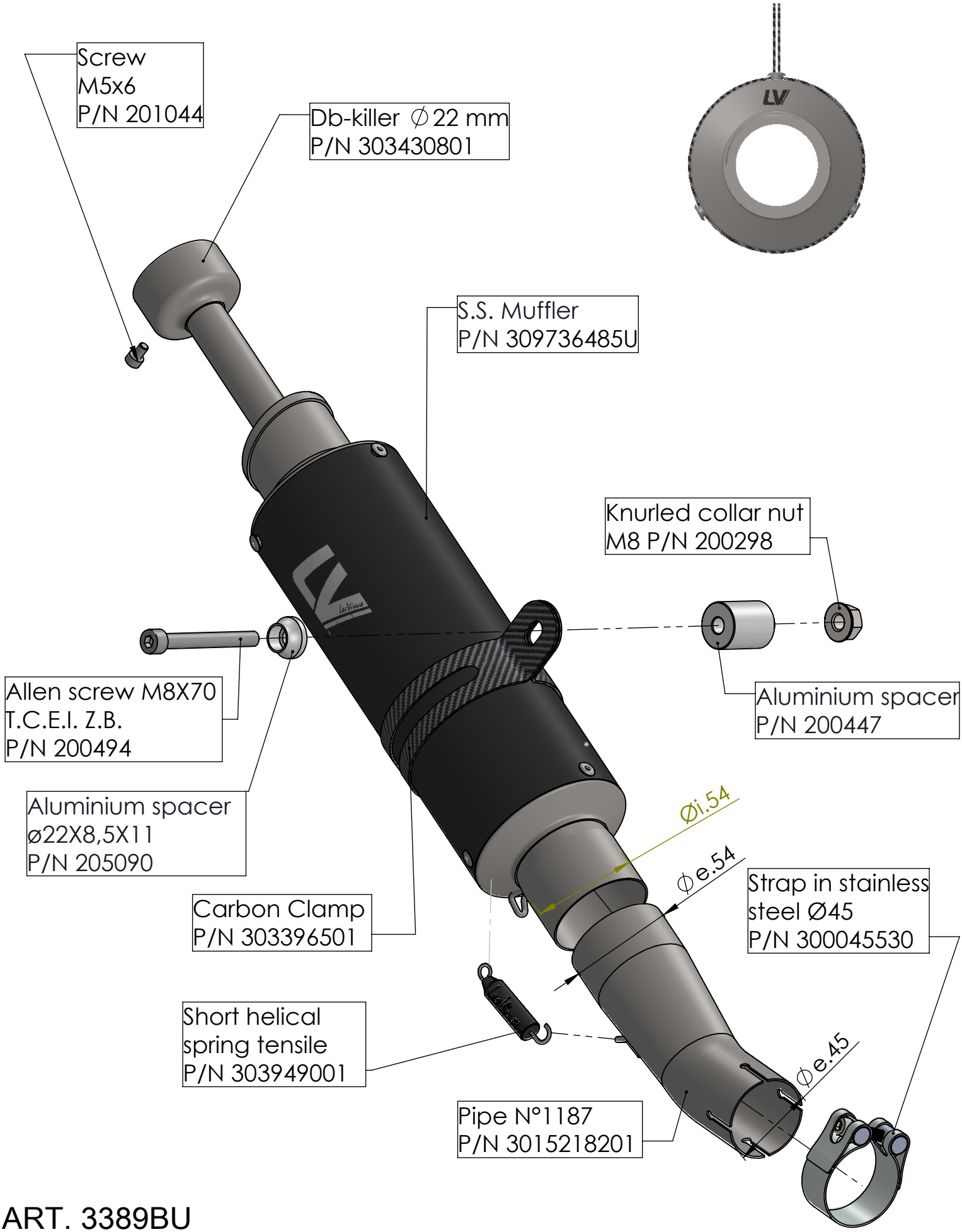

ART. 3389BU

KAWASAKI Z 400 / NINJA 400 / Z 500 / NINJA 500

SLIP-ON GP CORSA BLACK EDITION