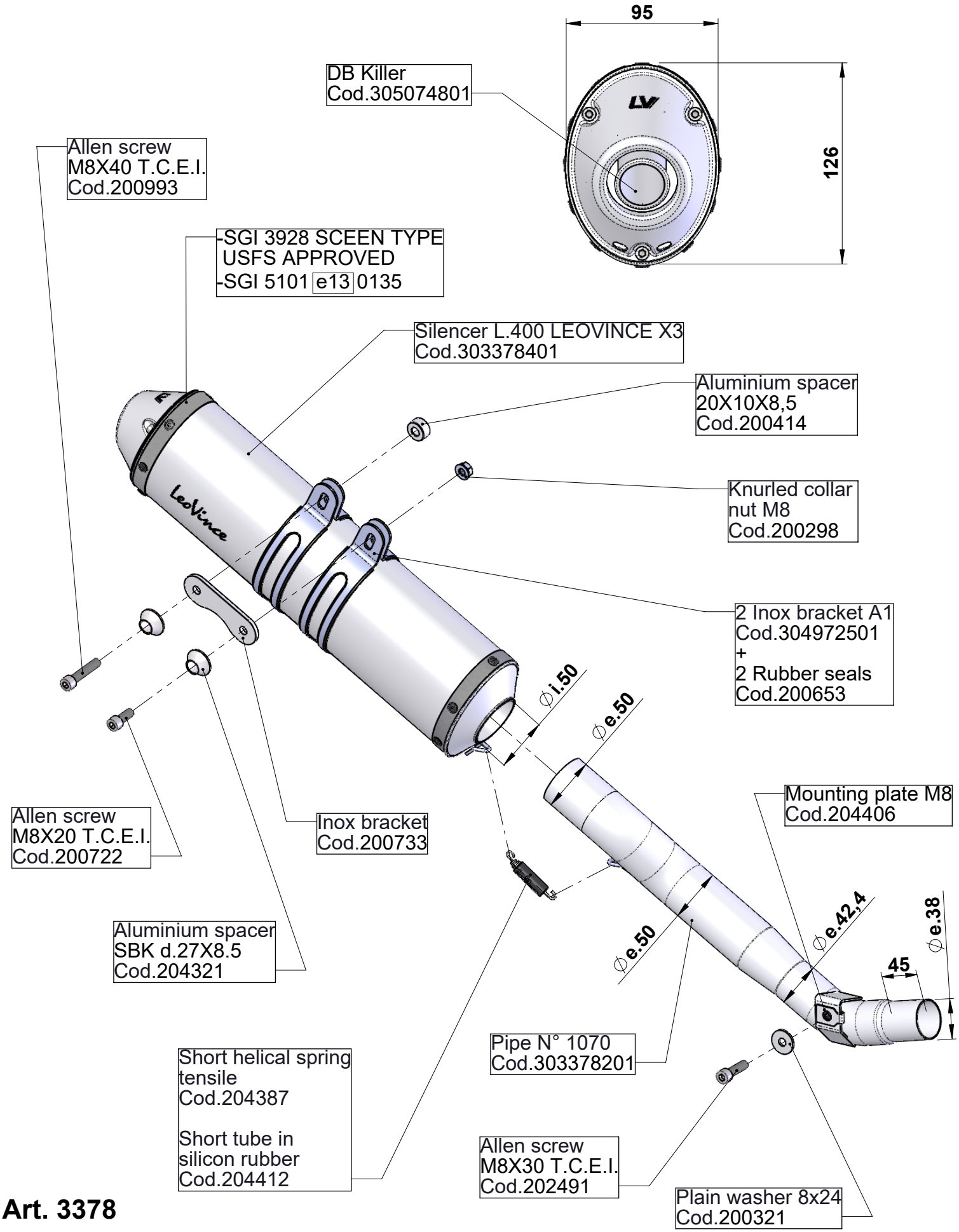

Art. 3378

SUZUKI DR 650 SE X USA

Slip-on LEOVINCE X3 OFF-ROAD ENDURO
OMOLOGATO - ALLUMINIO.