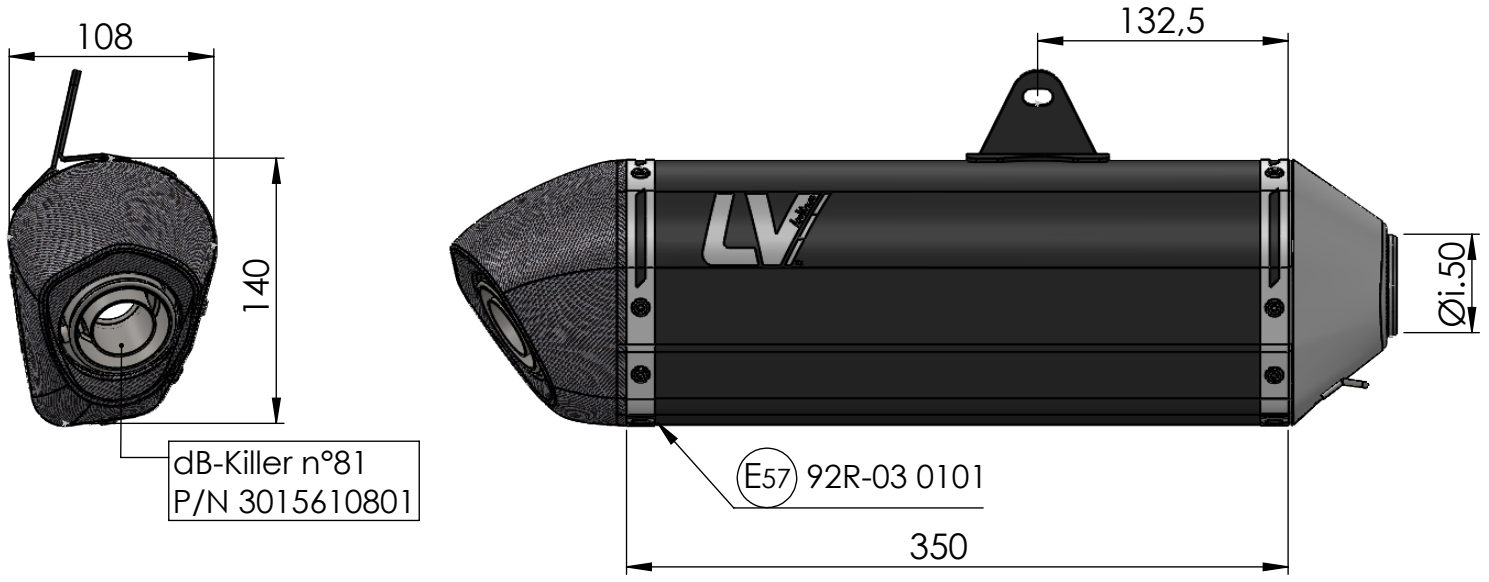

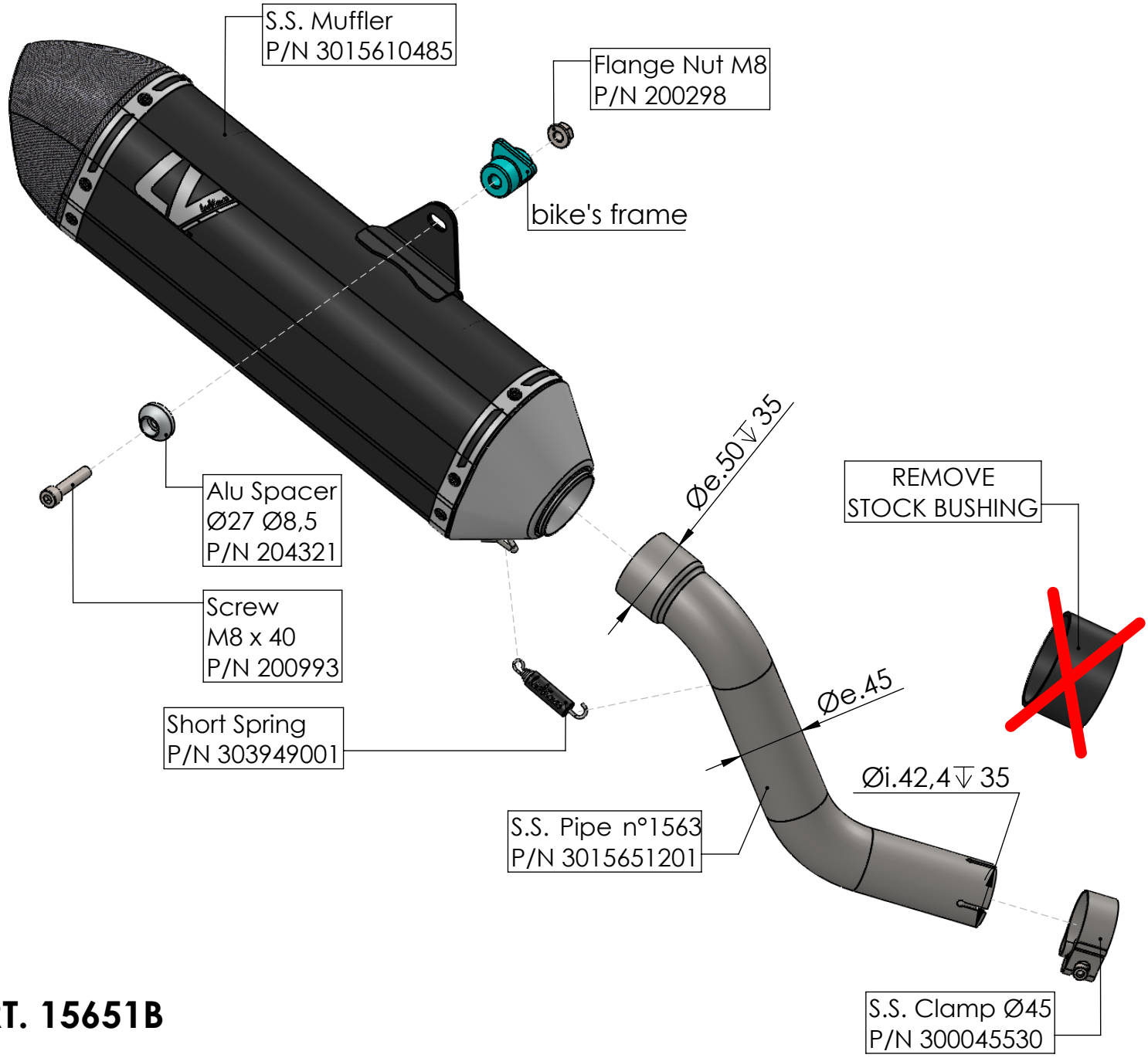

ART. 15651B

CF MOTO MT 700

SLIP-ON LV-14 BLACK EDITION APPROVED