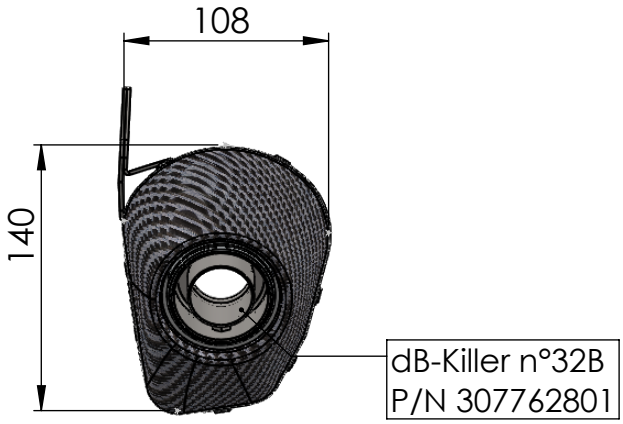

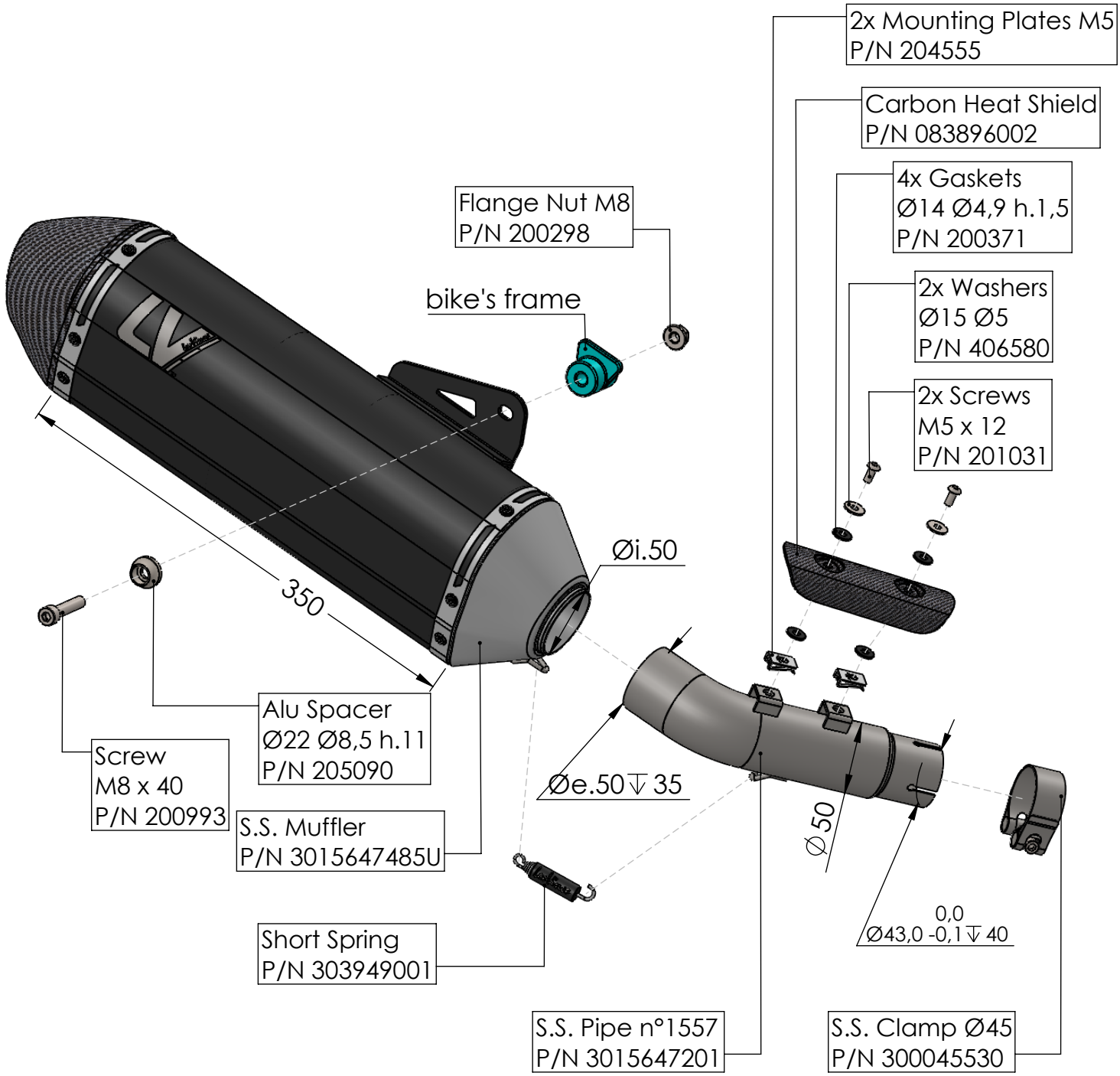

ART. 15647BU

KAWASAKI KLE 500

SLIP-ON LV-14 BLACK EDITION