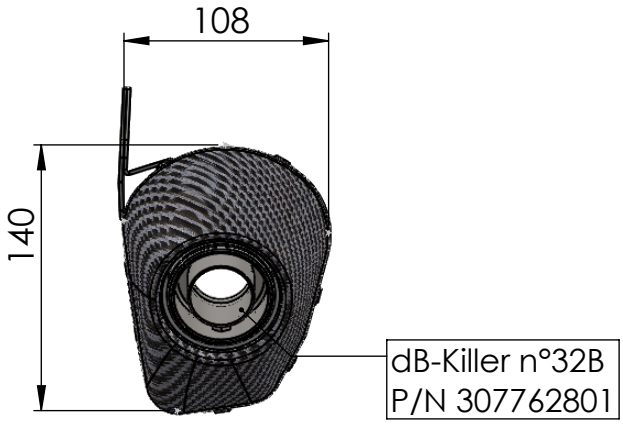

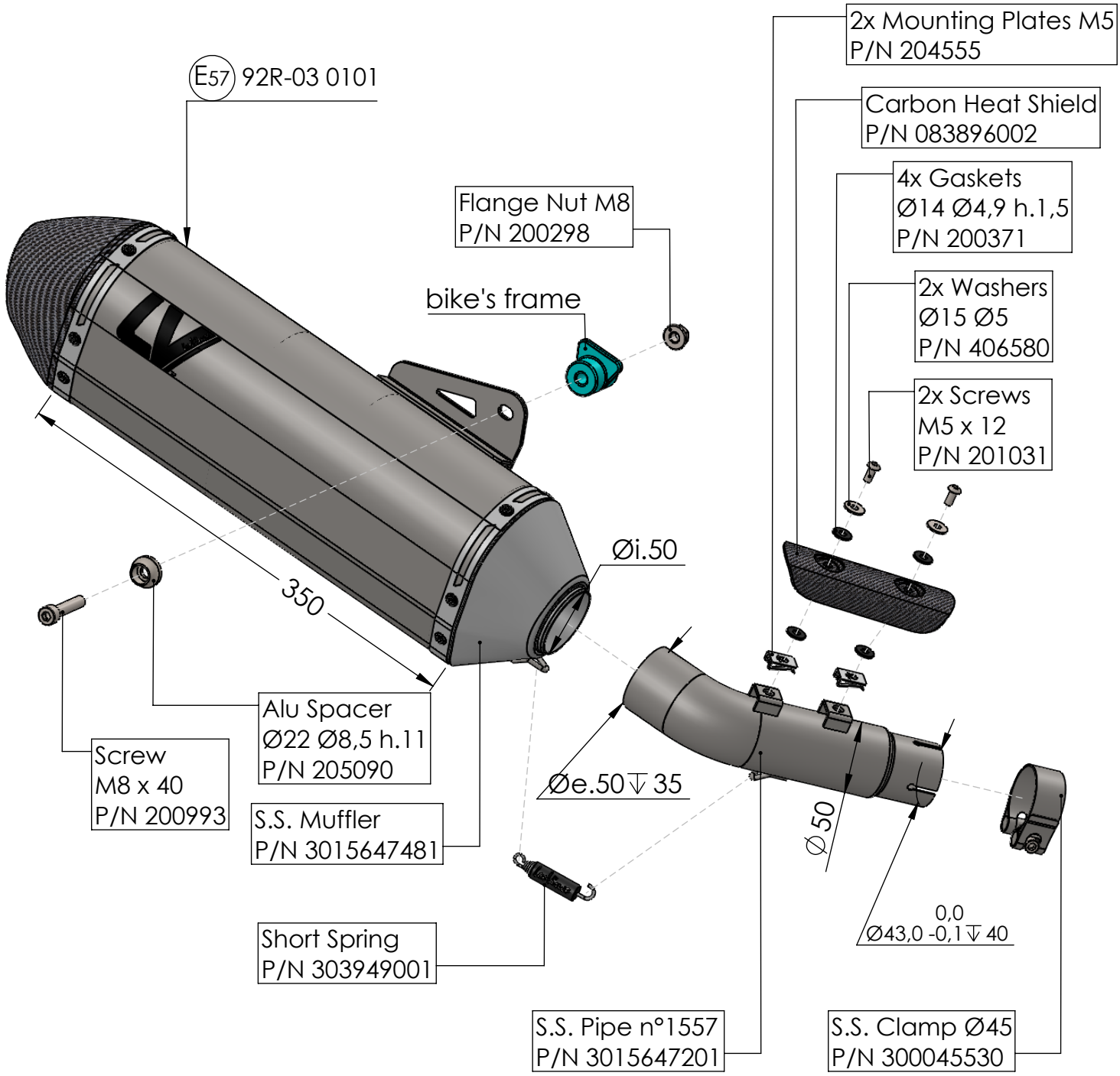

ART. 15647

KAWASAKI KLE 500

SLIP-ON LV-14 STAINLESS STEEL APPROVED