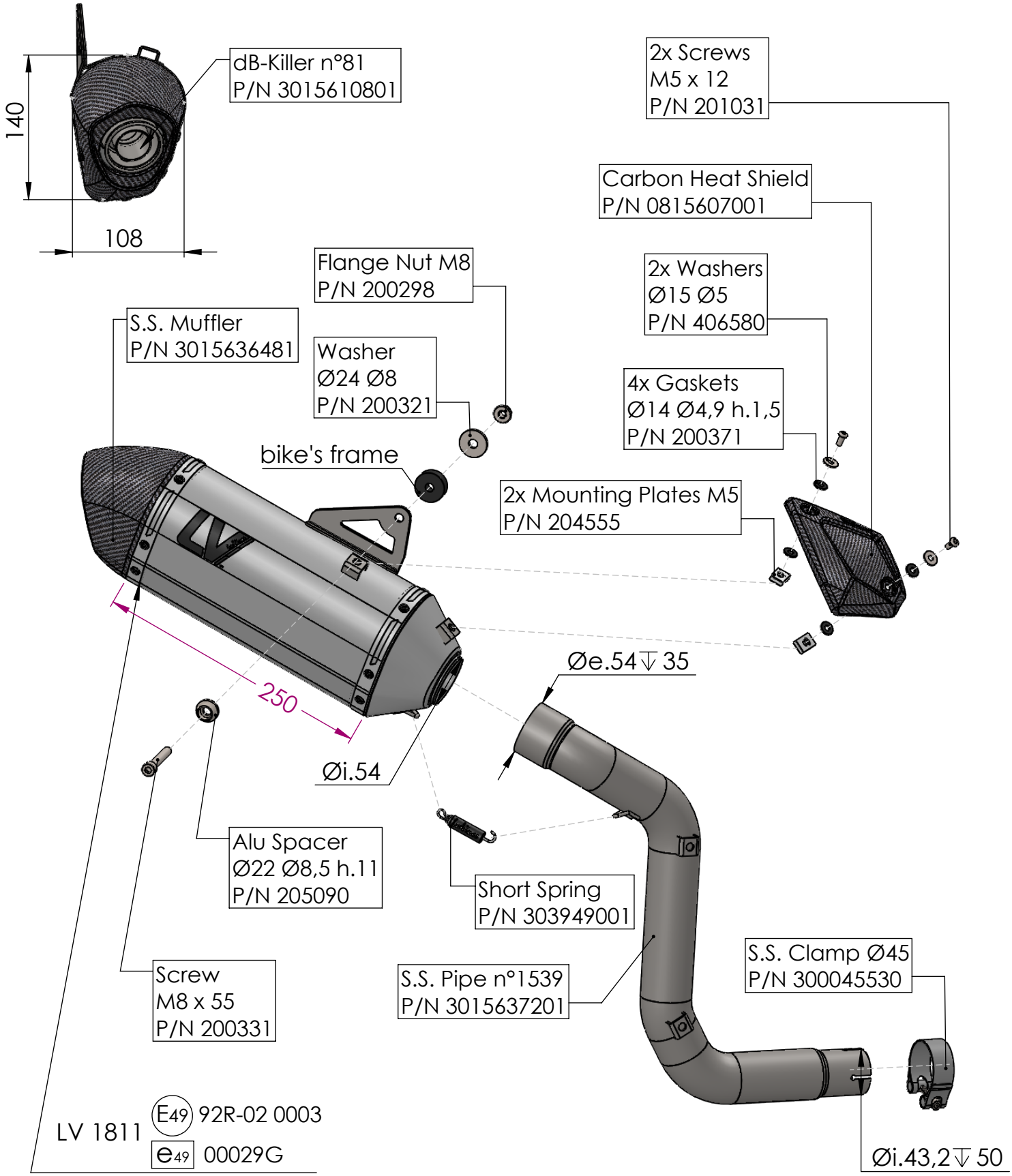

ART. 15637

VOGE VALICO 525 DSX

SLIP-ON LV-14 STAINLESS STEEL APPROVED