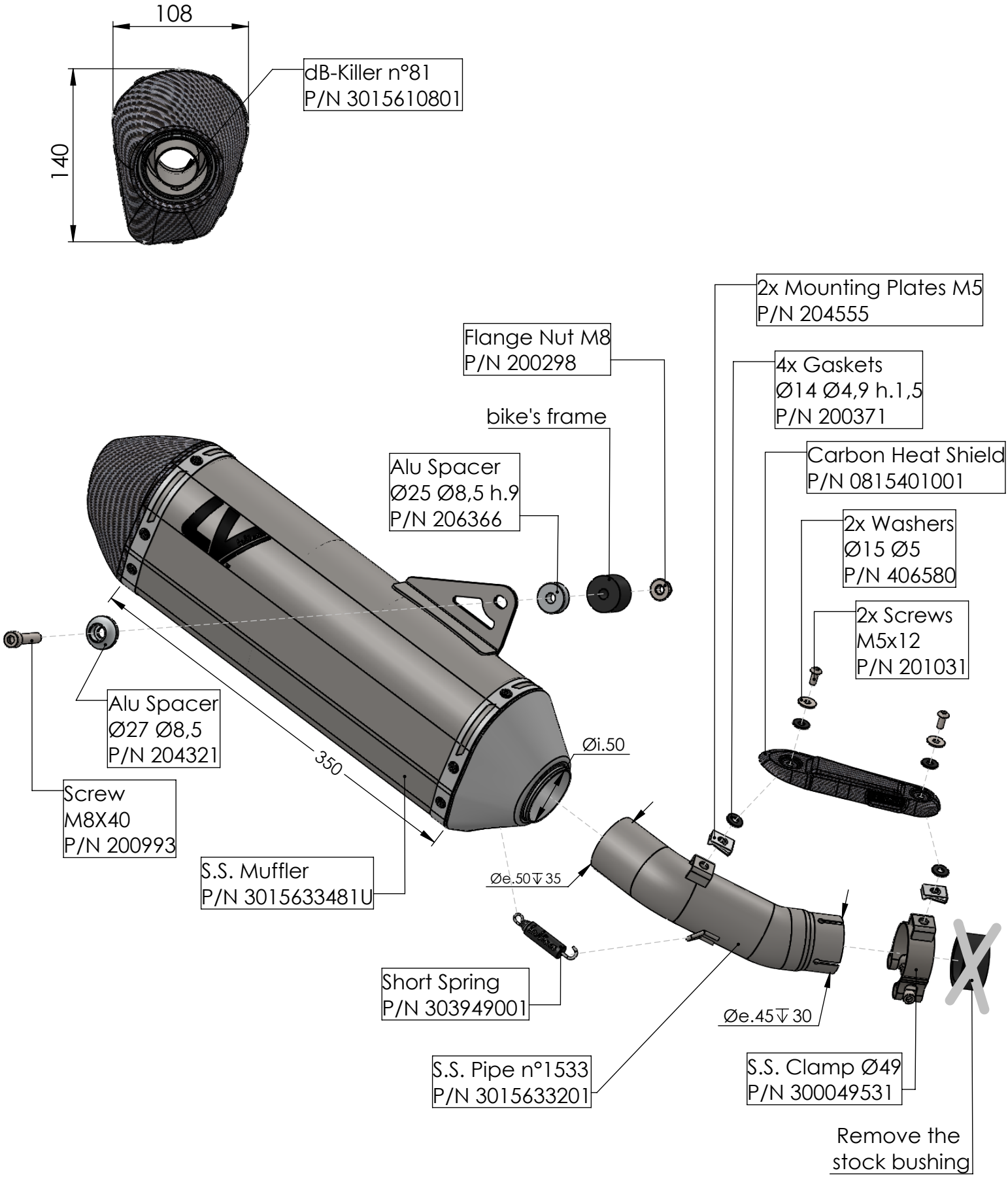

ART. 15633U

MOTO MORINI X-CAPE 700

SLIP-ON LV-14 STAINLESS STEEL