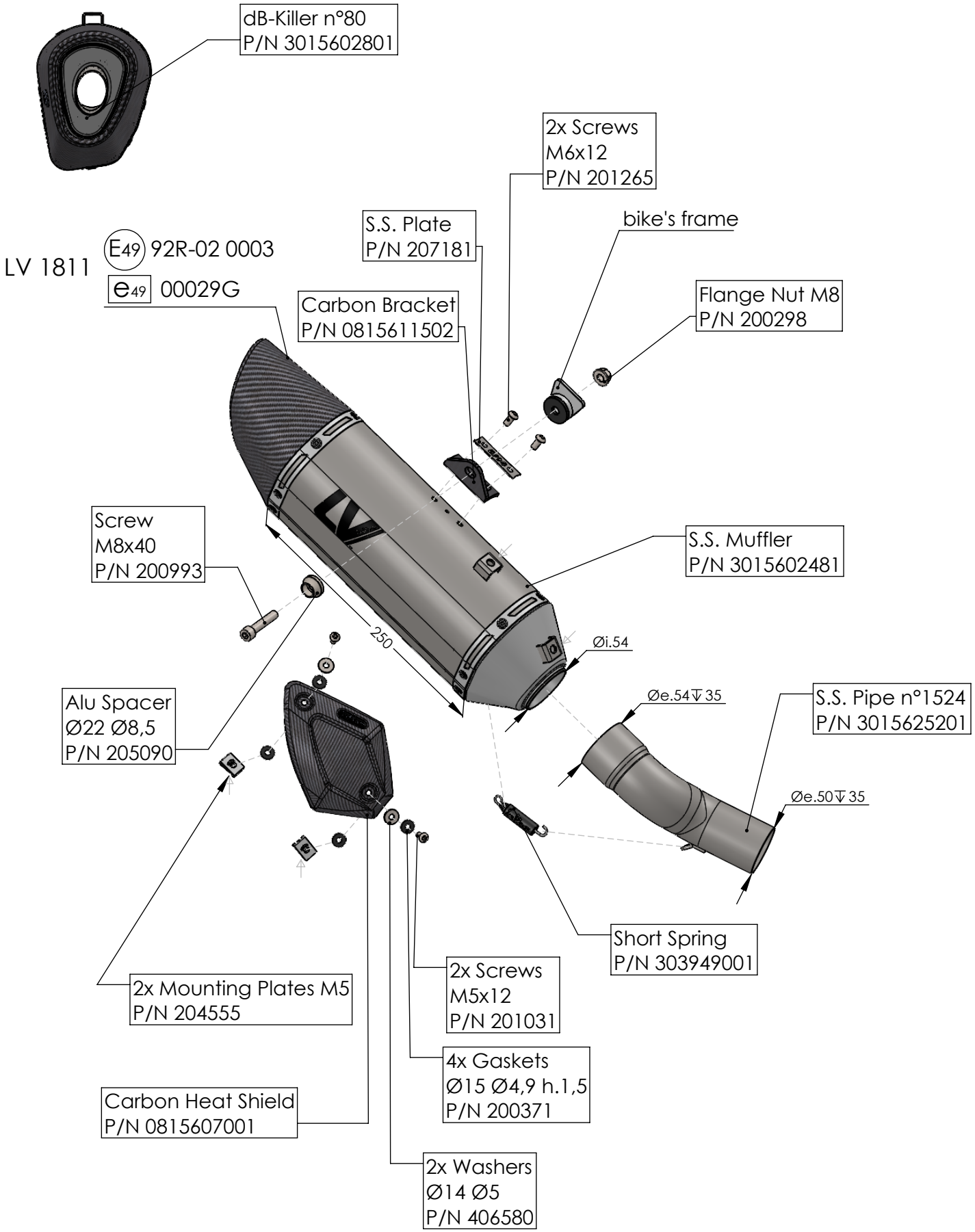

ART. 15625

KAWASAKI NINJA 636 ZX-6R

SLIP-ON LV-14R STAINLESS STEEL APPROVED