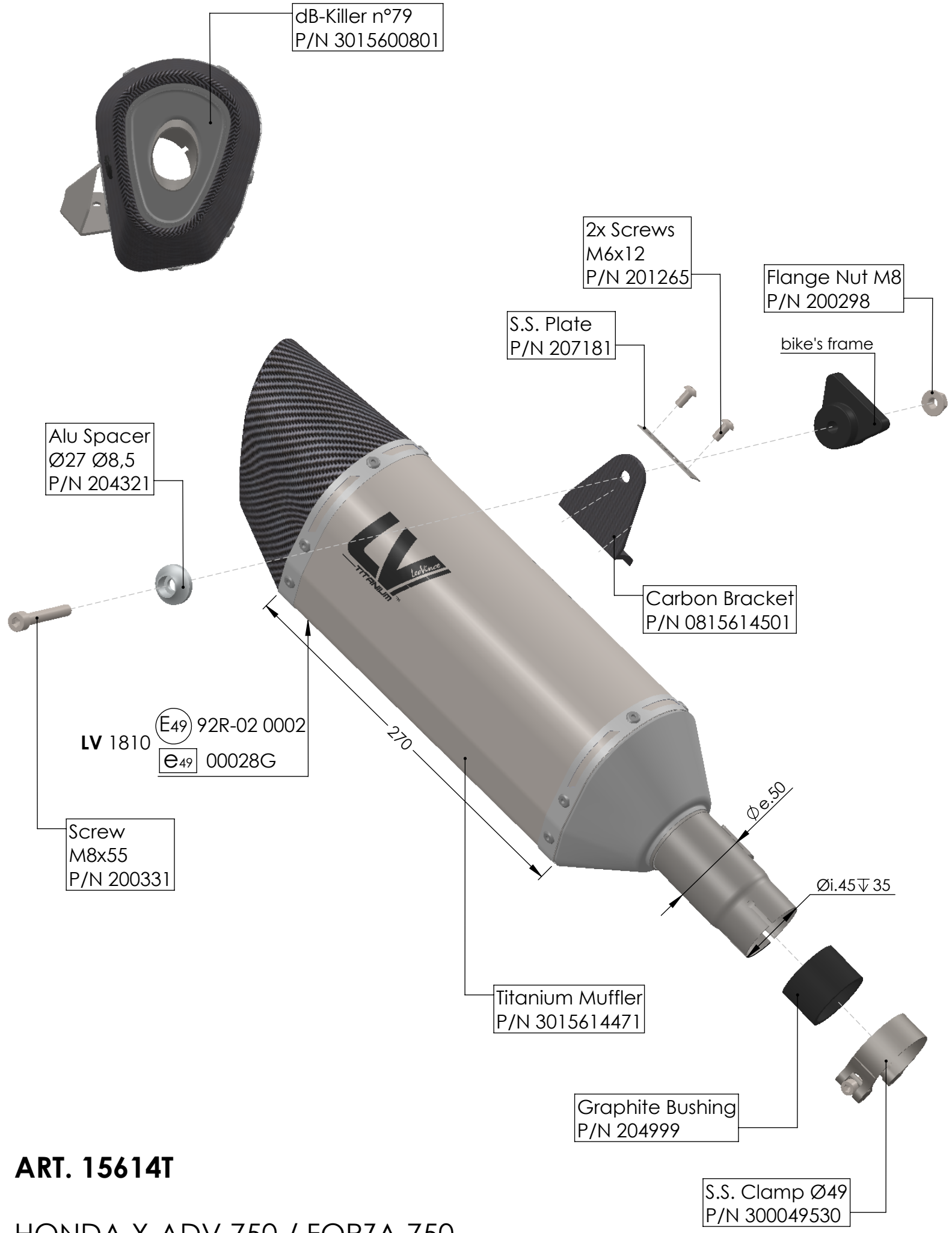

ART. 15614T

HONDA X-ADV 750 / FORZA 750

SLIP-ON LV-14R TITANIUM APPROVED