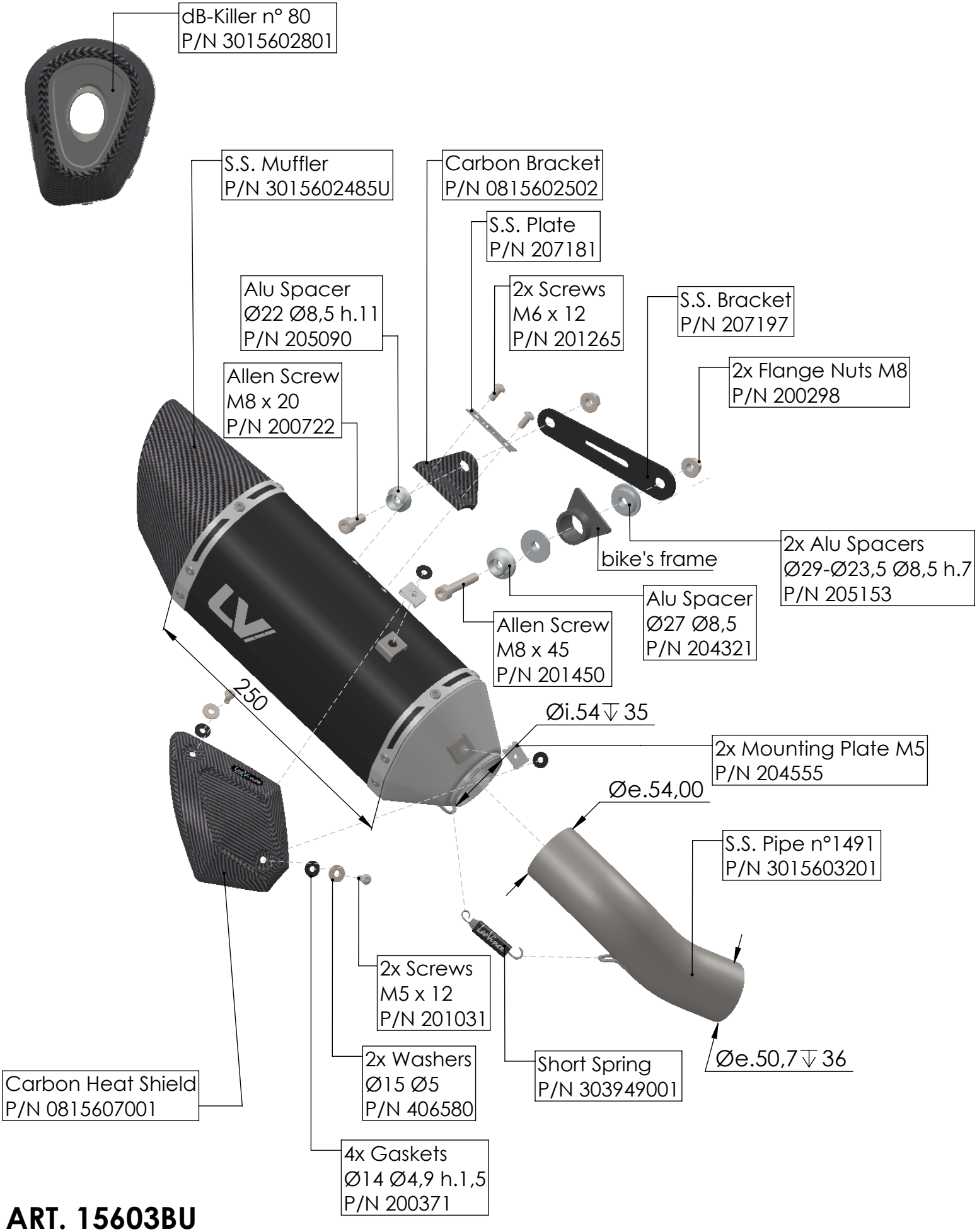


**ART. 15603BU**

KAWASAKI Z900

SLIP-ON - LV-14R - BLACK EDITION