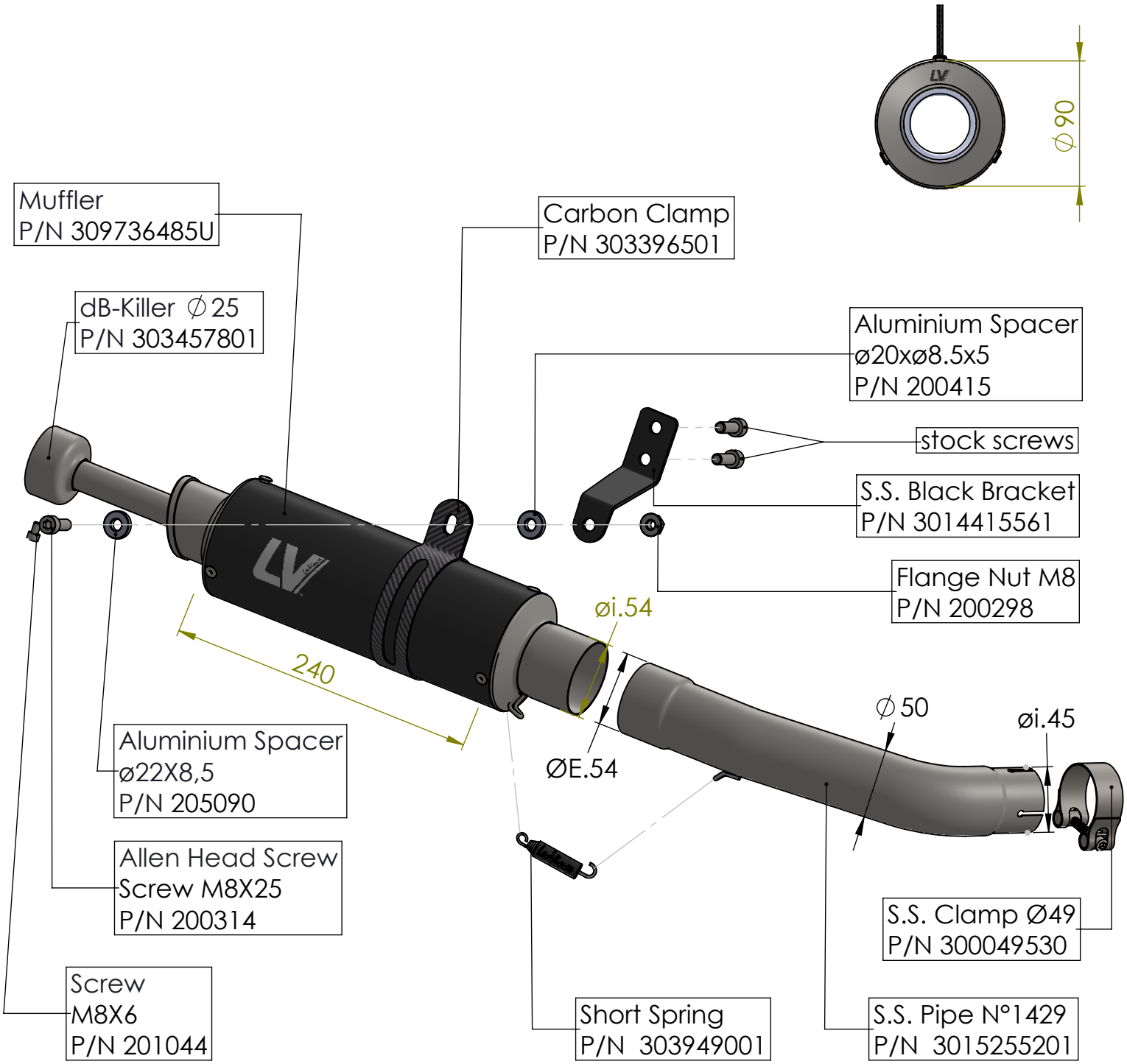

ART. 15501BU

KTM RC 125 / 390

SLIP-ON GP CORSA BLACK EDITION