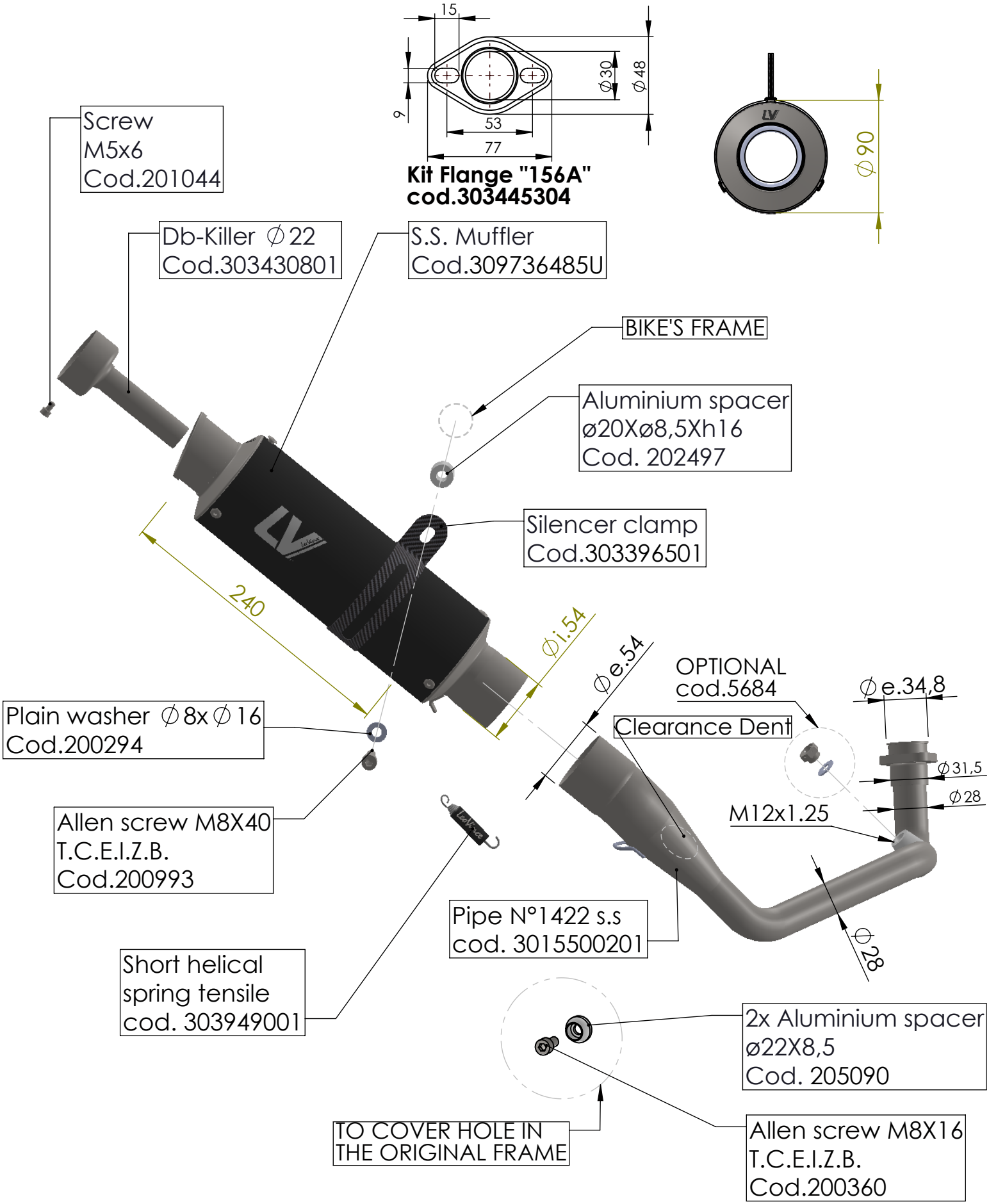

ART. 15500BU

APRILIA SR GT 125 / 200

FULL SYSTEM GP CORSA BLACK EDITION