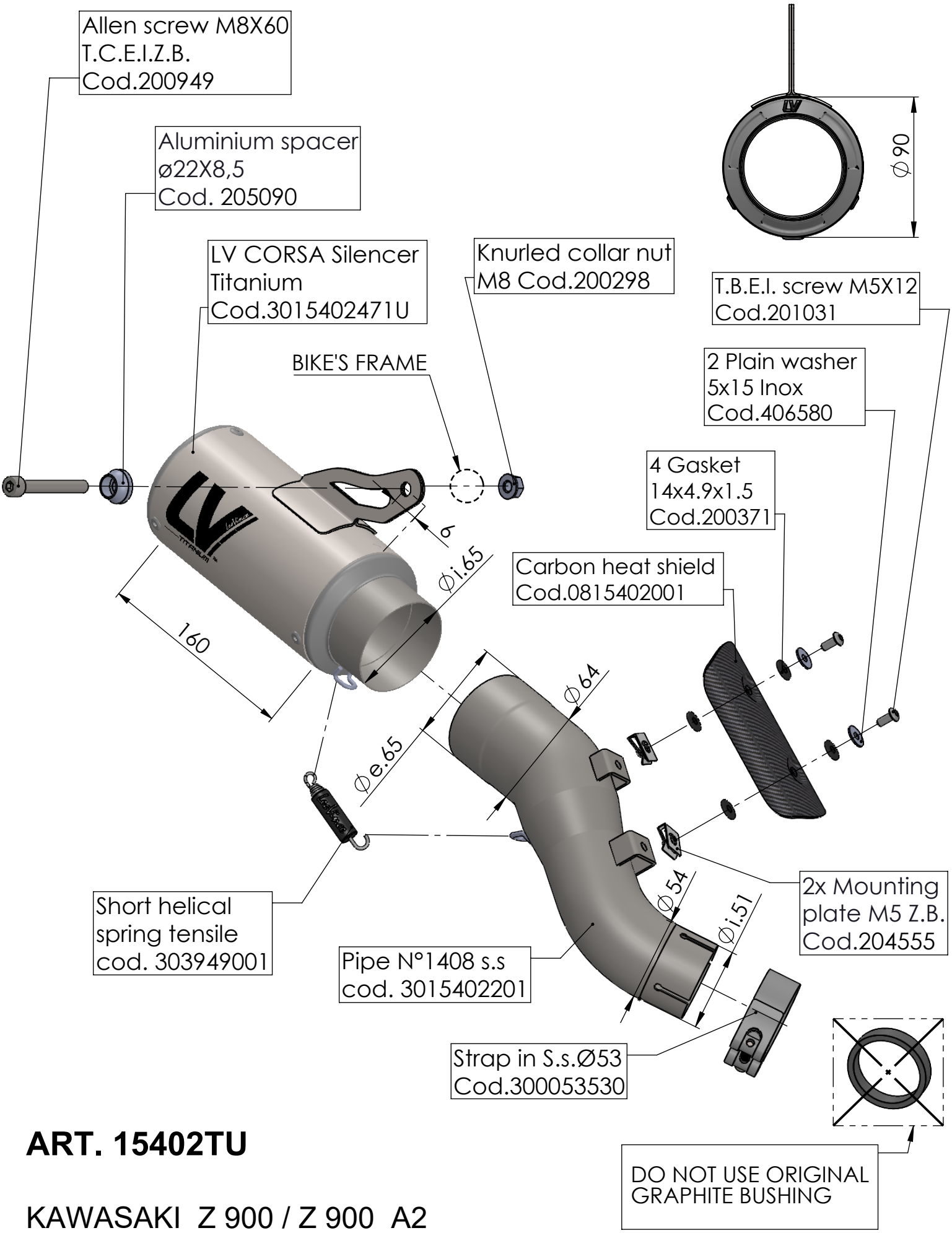


# ART. 15402TU

KAWASAKI Z 900 / Z 900 A2
(also fits 35kW & 70kW versions)

SLIP-ON - LV CORSA - TITANIUM