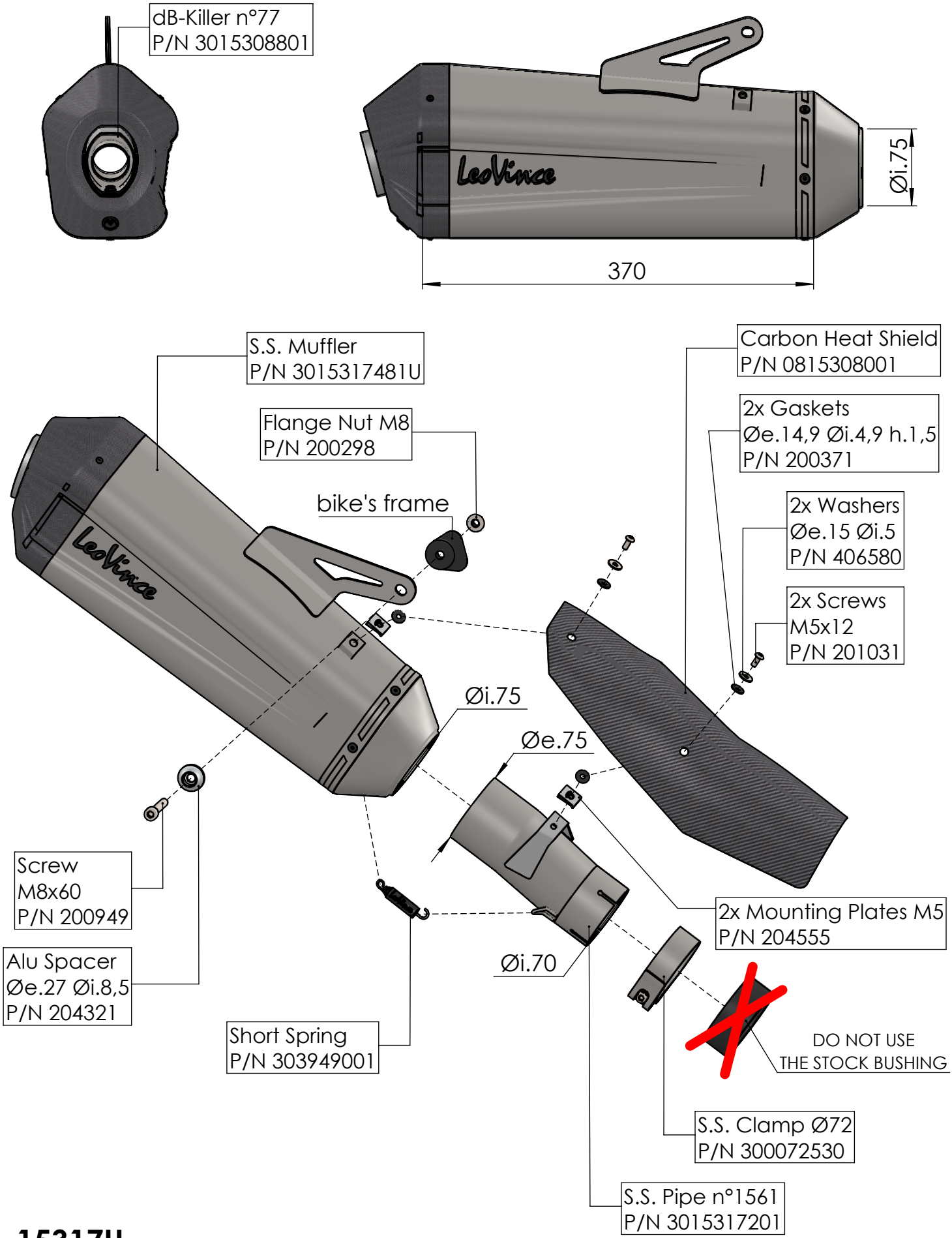

ART. 15317U

MOTO MORINI X-CAPE 1200

SLIP-ON LV-12R STAINLESS STEEL