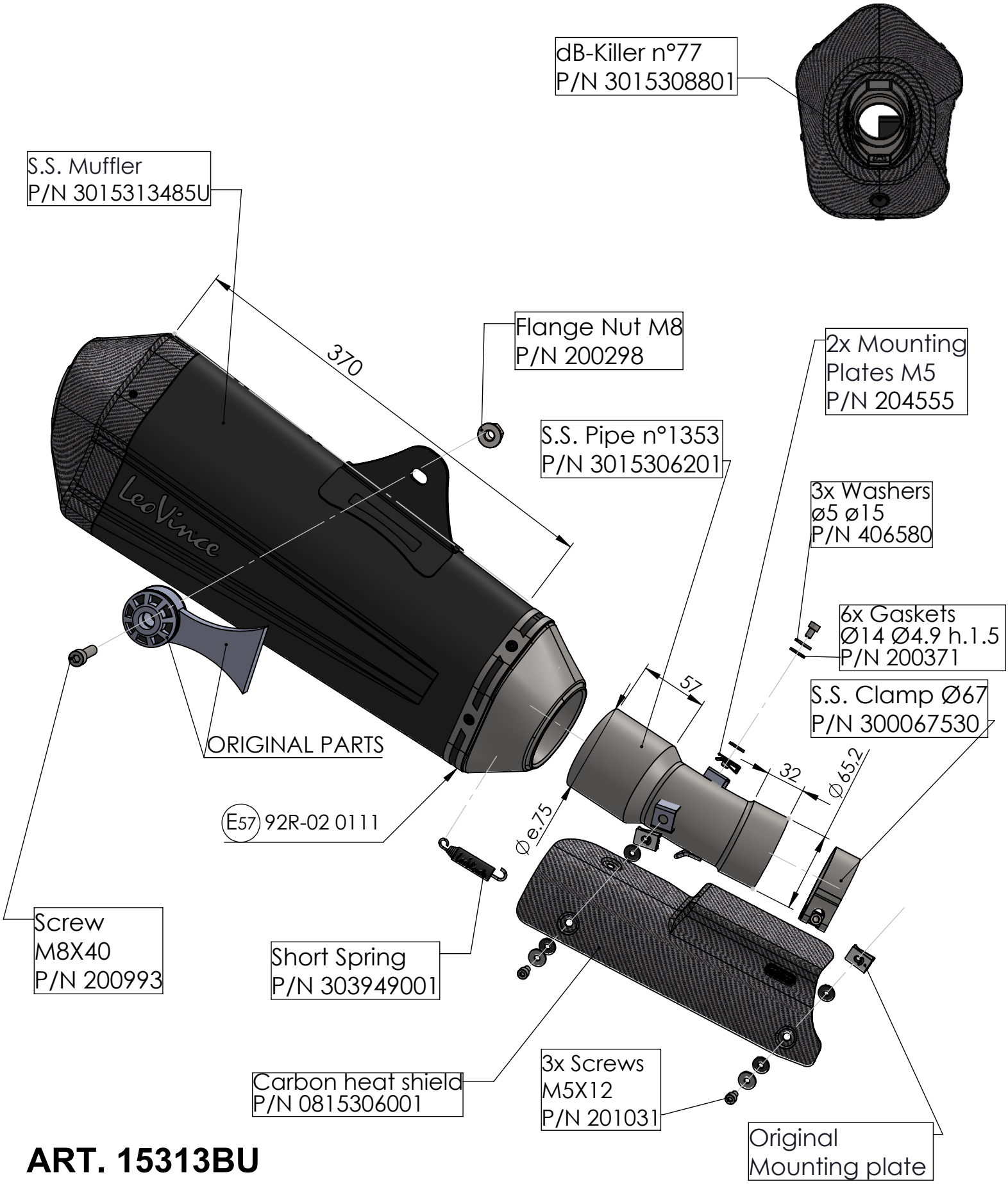

ART. 15313BU

BMW R 1250 R / RS
(Fits with original panniers) (Fits with original centre stand)

SLIP-ON LV-12 R BLACK EDITION