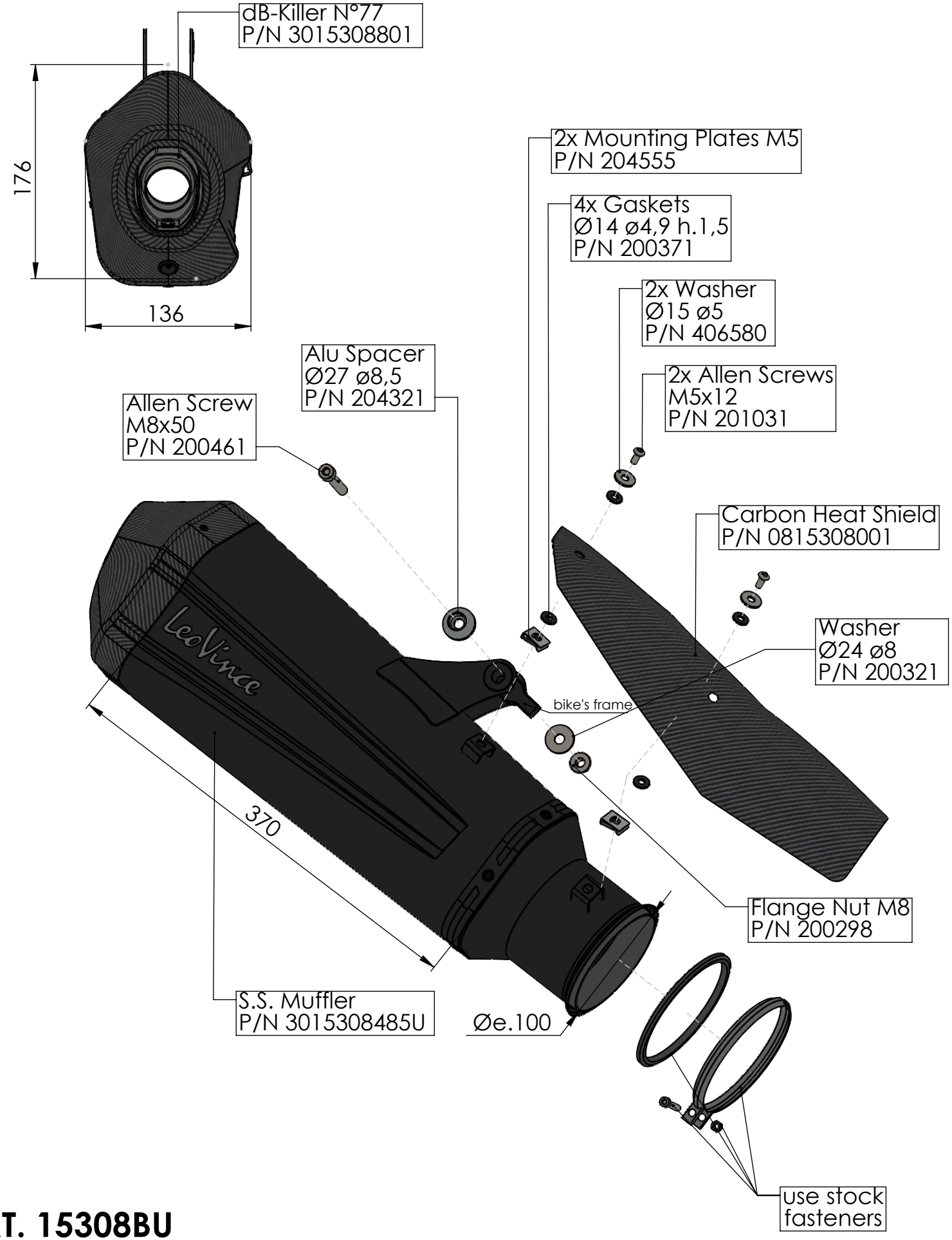

ART. 15308BU

KTM 1290 SUPER ADVENTURE R/S

SLIP ON LV-12 R BLACK EDITION