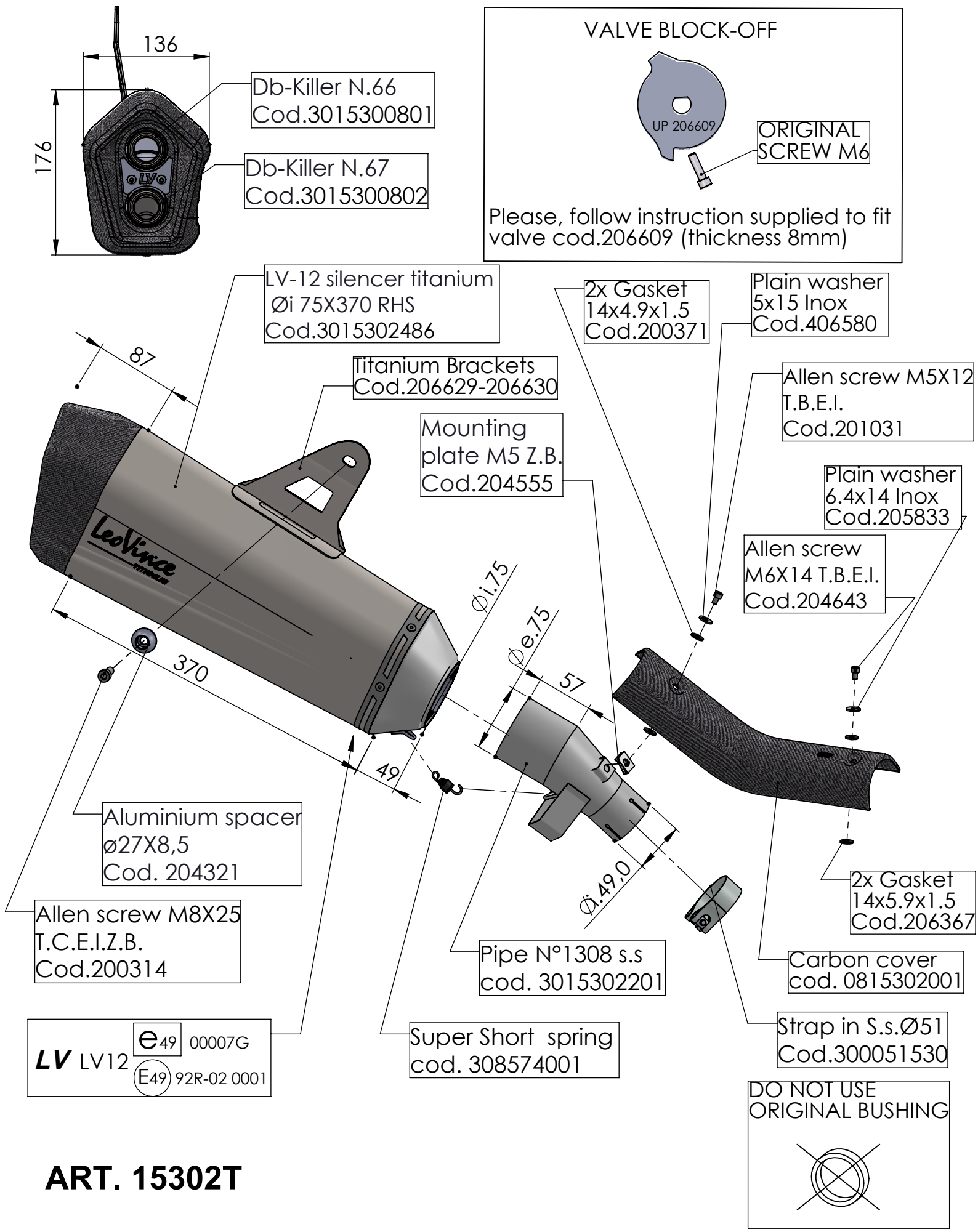

ART. 15302T

HONDA CRF 1100 L AFRICA TWIN/ADVENTURE SPORT/DCT
(fits with original panniers)

SLIP-ON - LV-12 - TITANIUM - APPROVED