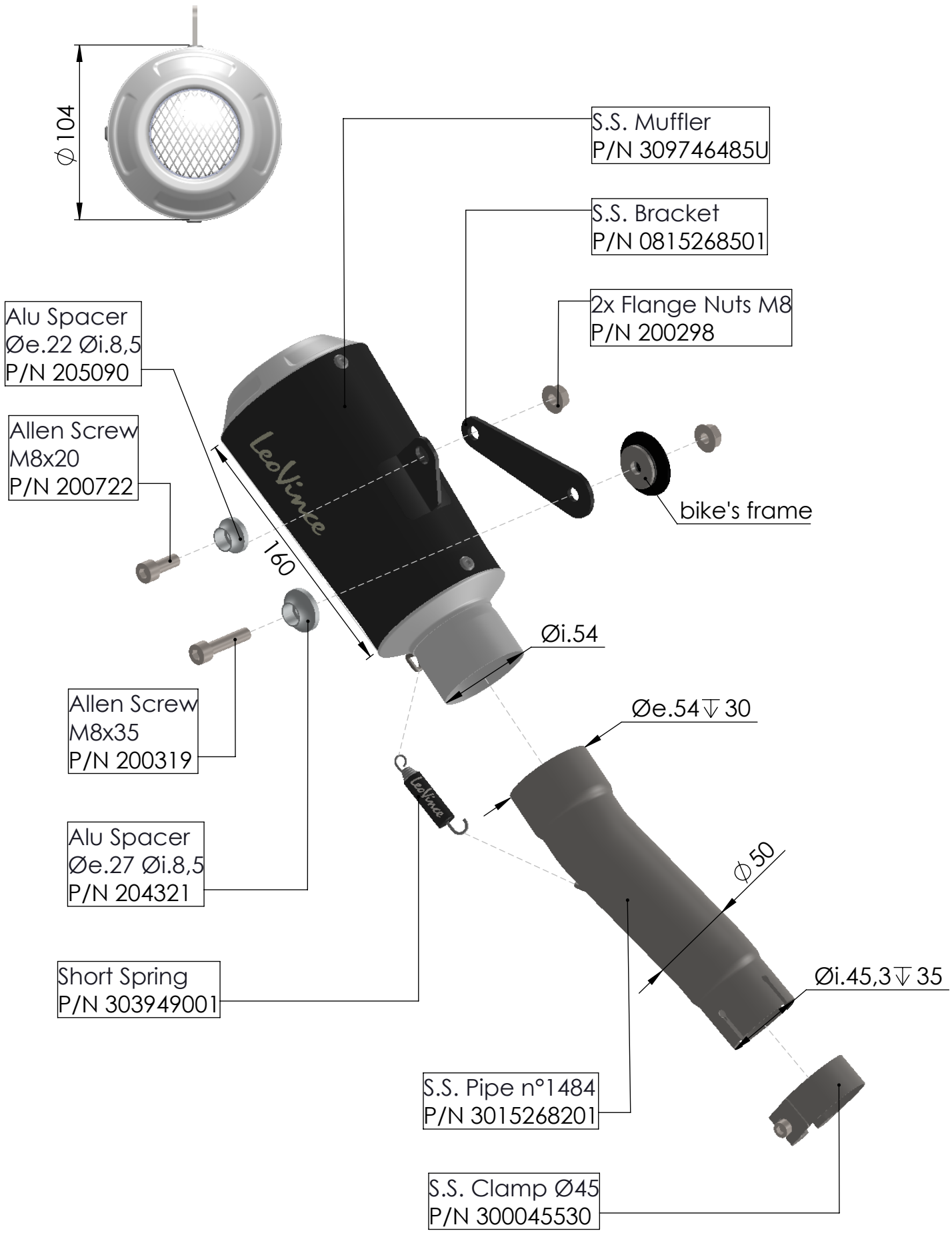

ART. 15268BU

TRIUMPH SPEED 400 / SCRAMBLER 400 X

SLIP ON - LV-10 - BLACK EDITION