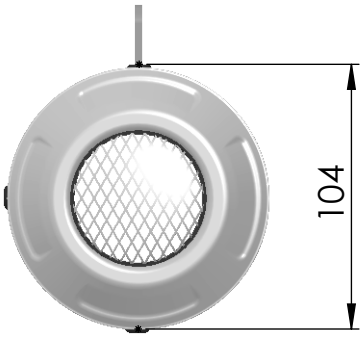

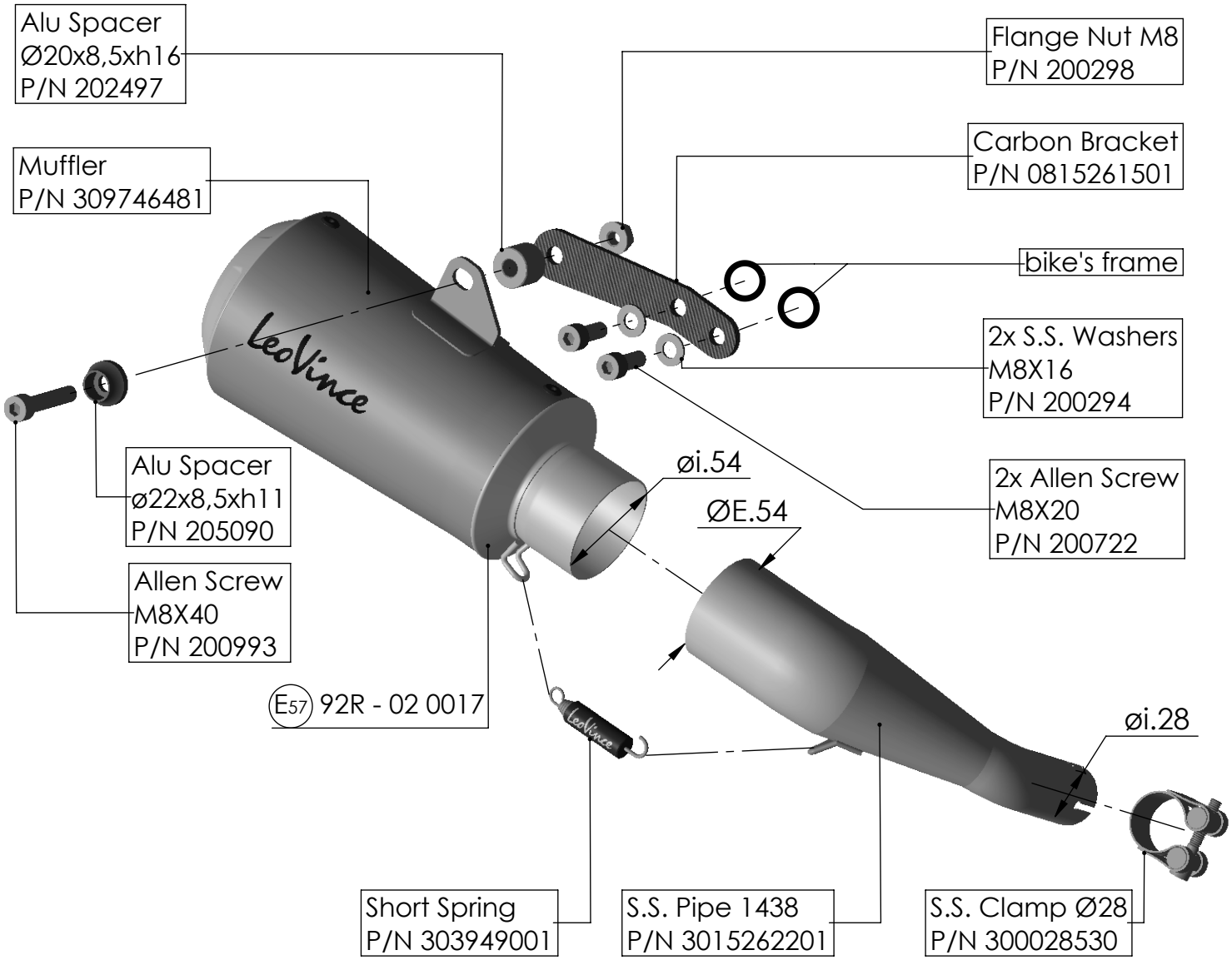

ART. 15262

BENELLI TNT TORNADO NAKED T 125/135

SLIP-ON LV-10 STAINLESS STEEL - APPROVED