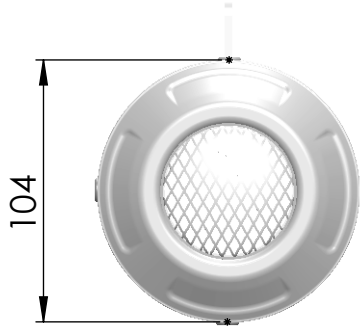

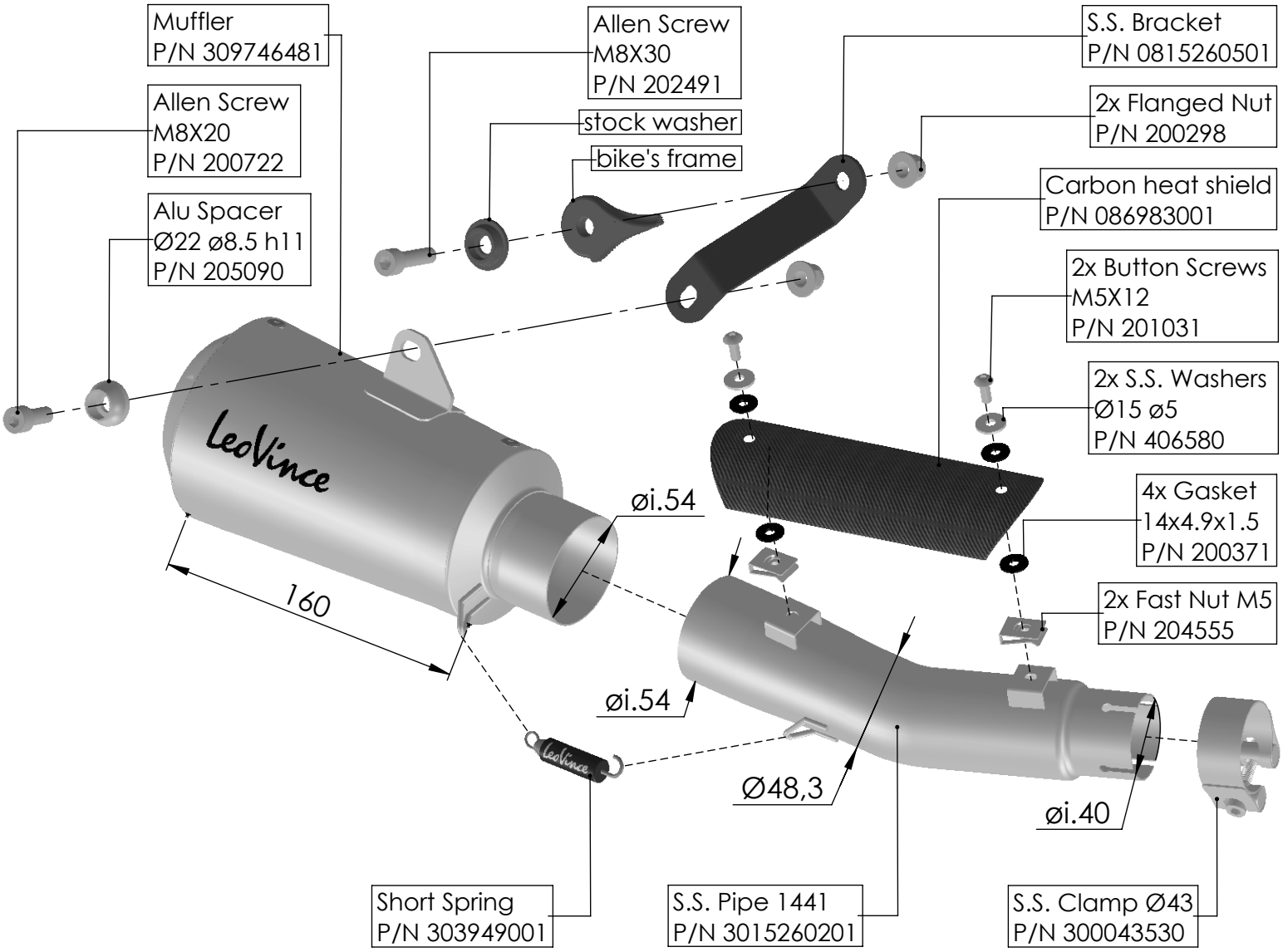

ART. 15260

DUCATI MONSTER 937 - (also fits 35 kW version)

SLIP-ON - LV10 - STAINLESS STEEL