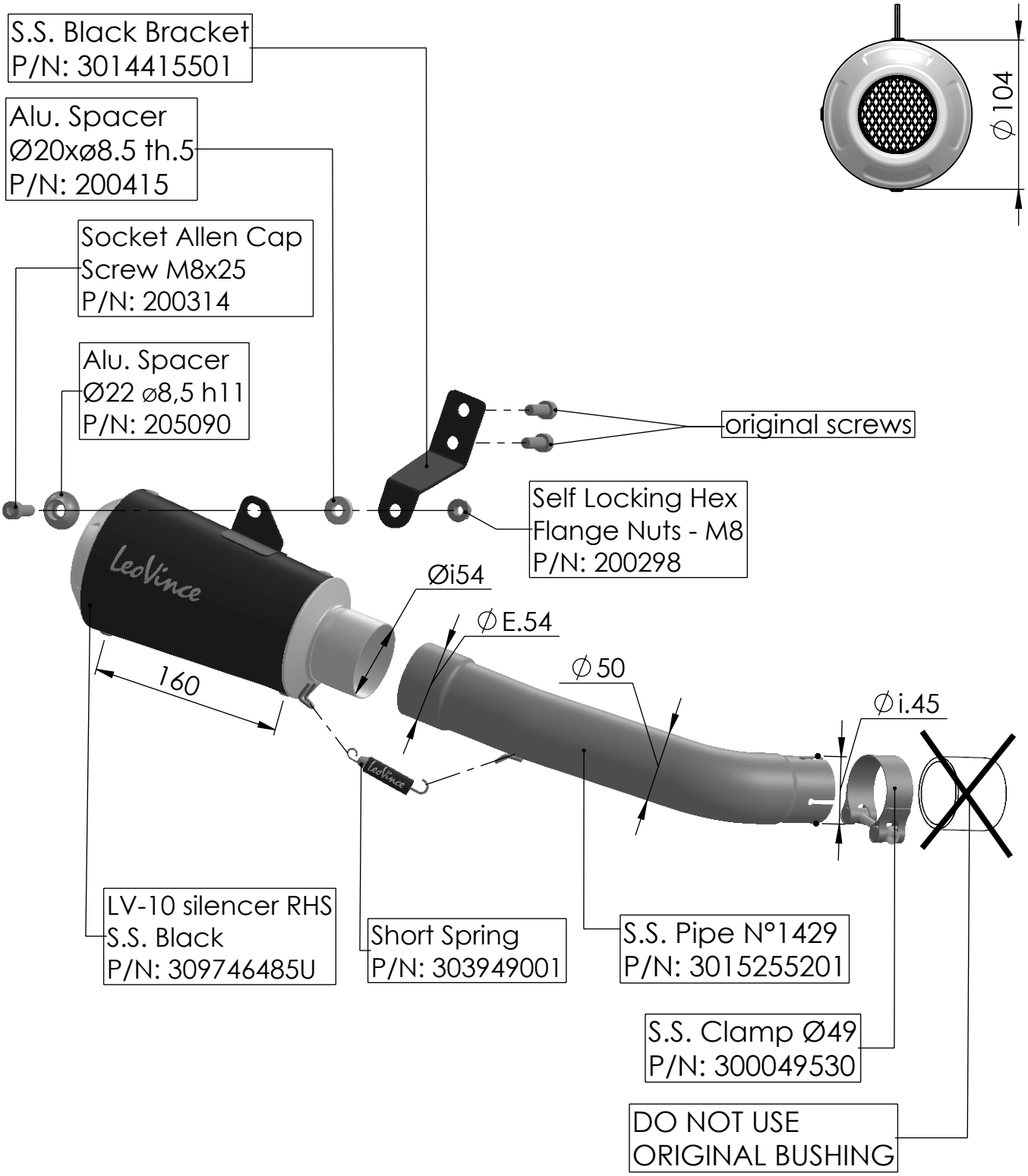

ART. 15255BU

KTM RC 125 / RC 390

SLIP-ON / LV-10 / S.S. BLACK