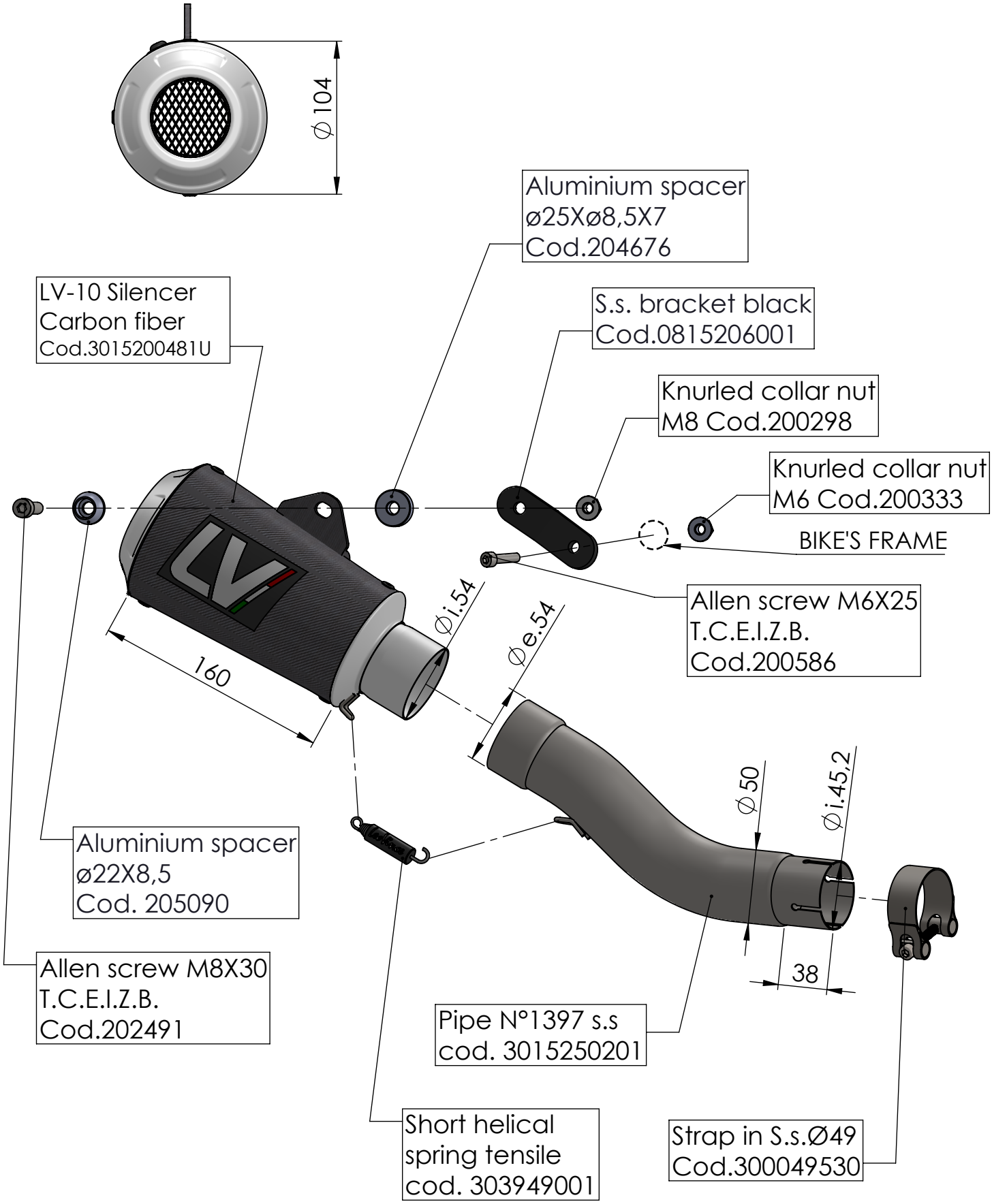

ART. 15250CU

DUCATI SCRAMBLER 800 ICON / ICON DARK / NIGHTSHIFT /

URBAN MOTARD (also fits 35kW version)

SLIP-ON - LV-10 - CARBON