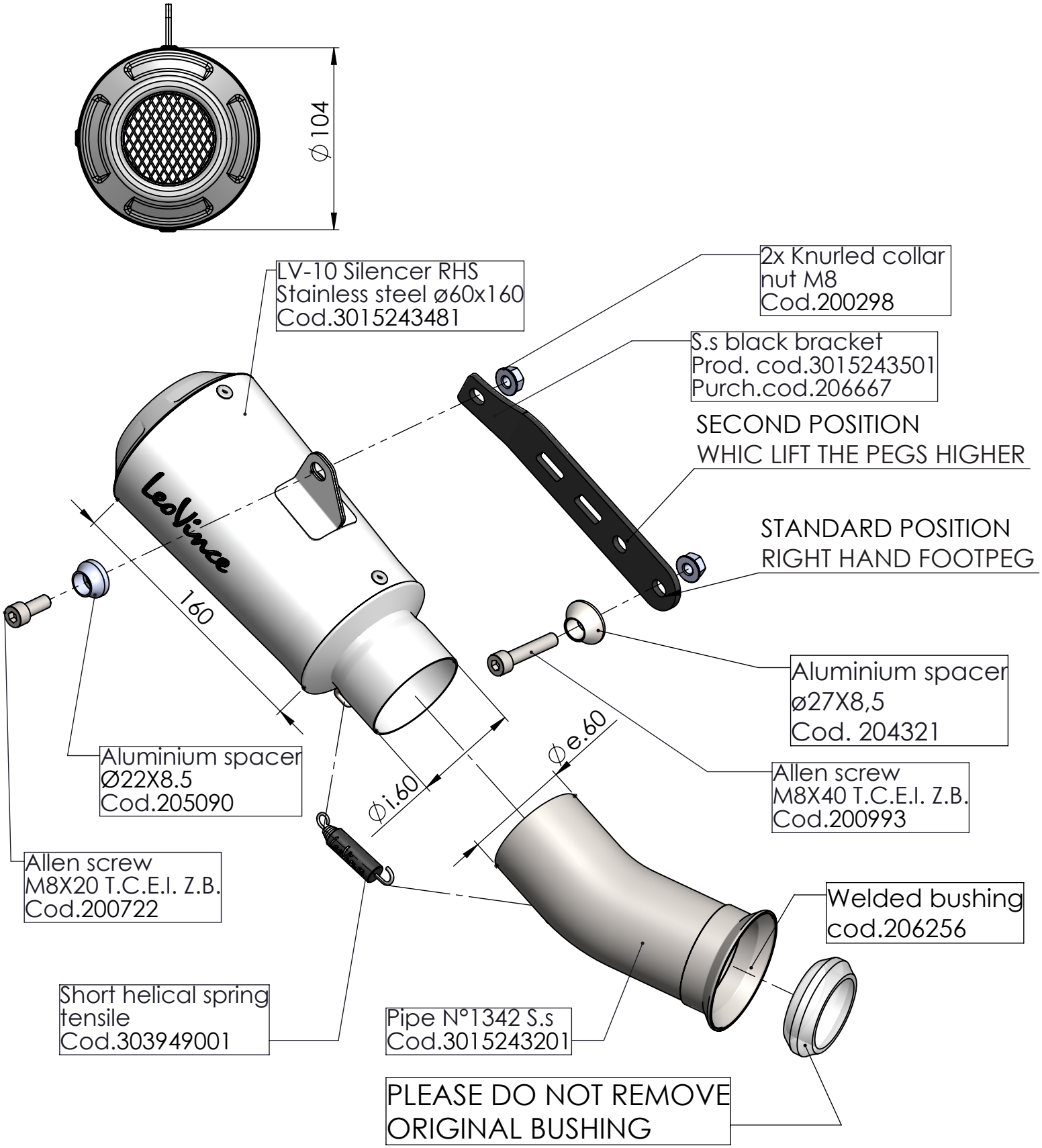

ART 15243

KTM 1290 SUPERDUKE R / RR / EVO

SLIP-ON - LV-1O - STAINLESS STEEL