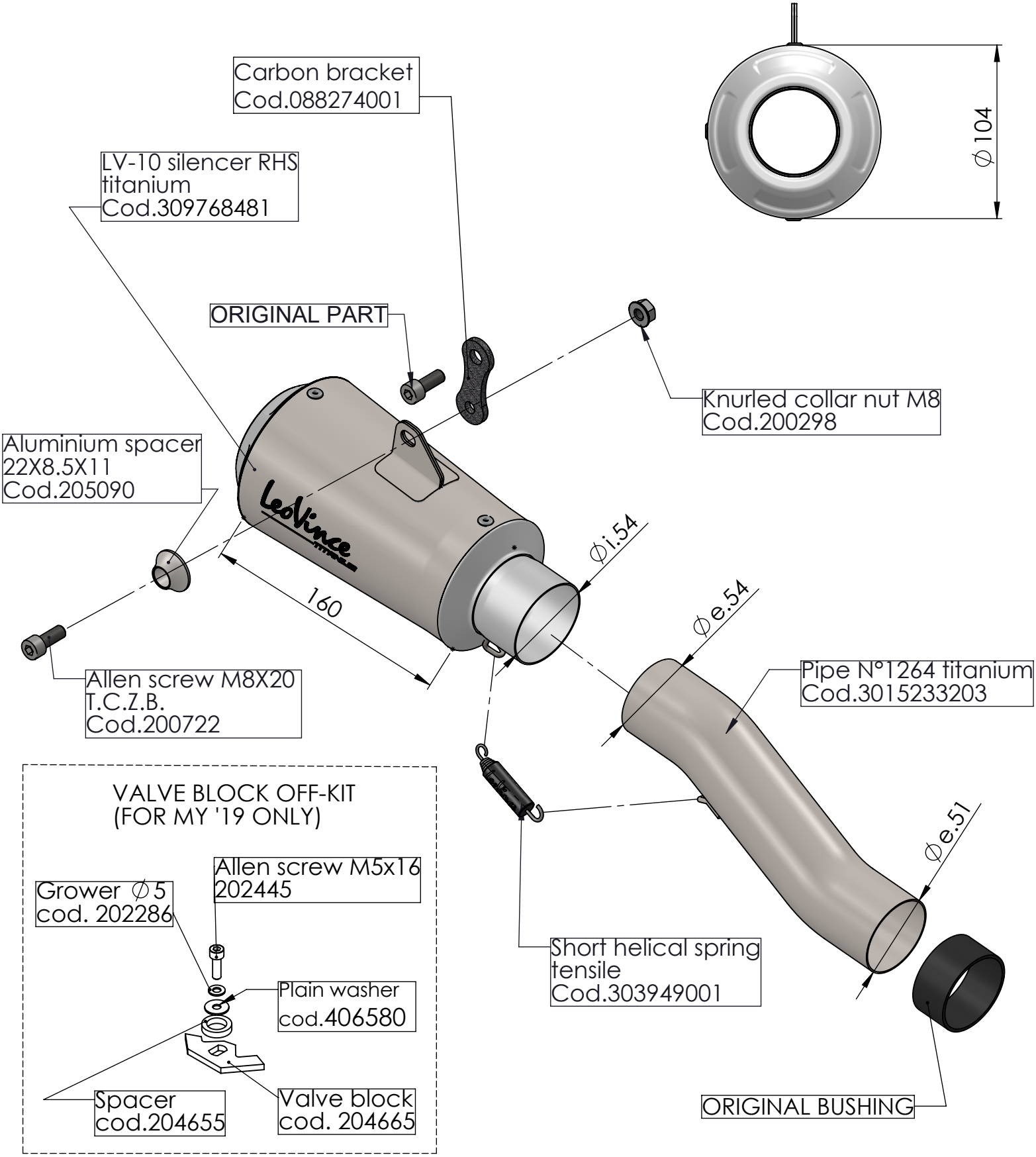

ART. 15233T

KAWASAKI ZX-6R-NINJA

SLIP-ON - LV-10 - TITANIUM