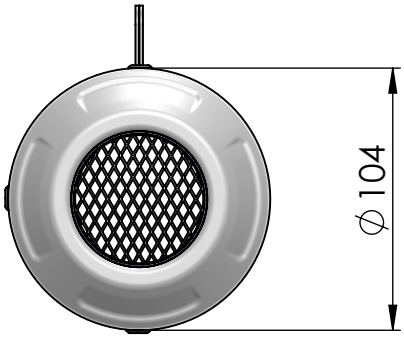

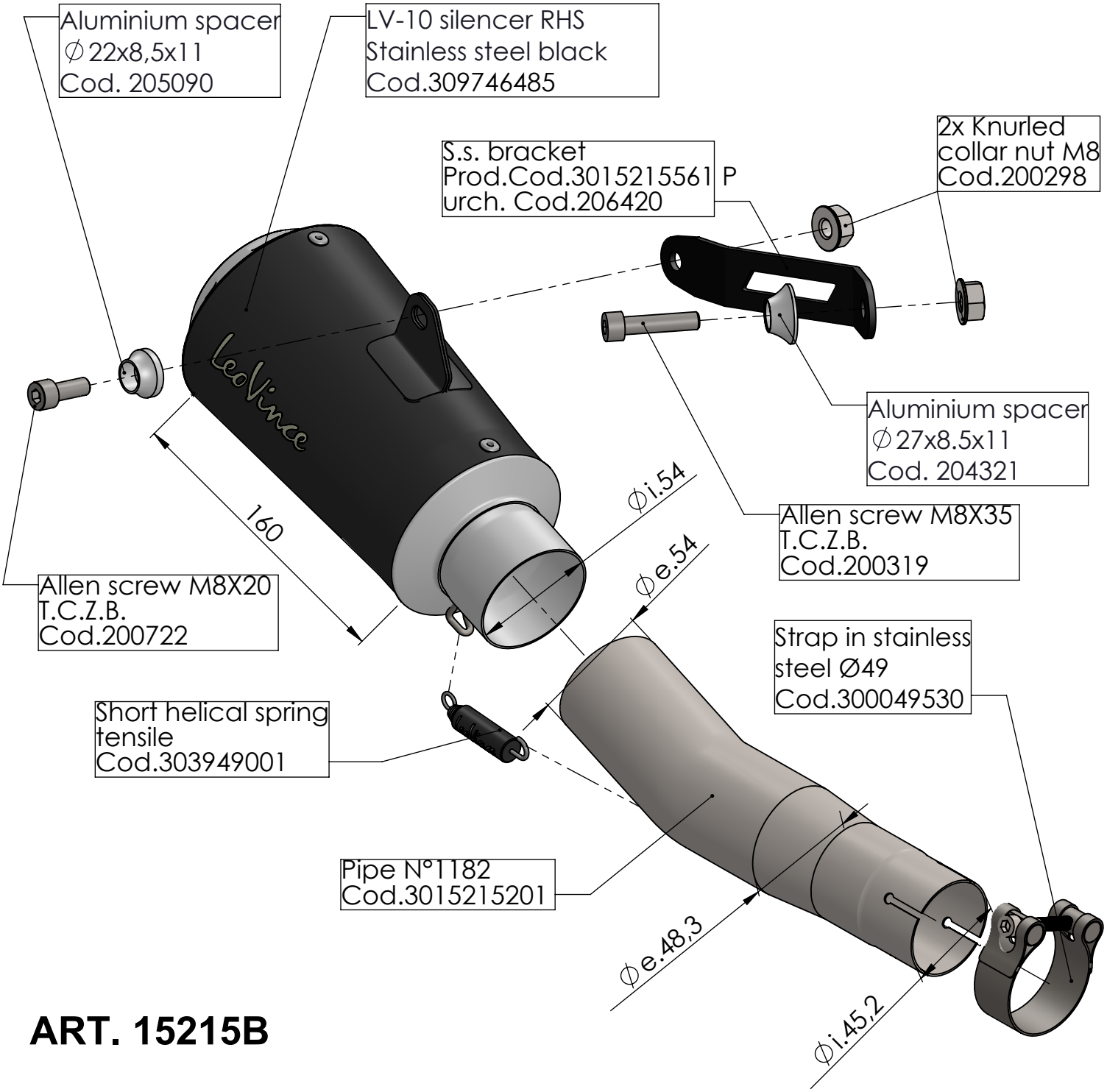

ART. 15215B

YAMAHA YZF-R6

SLIP-ON - LV-10 - BLACK