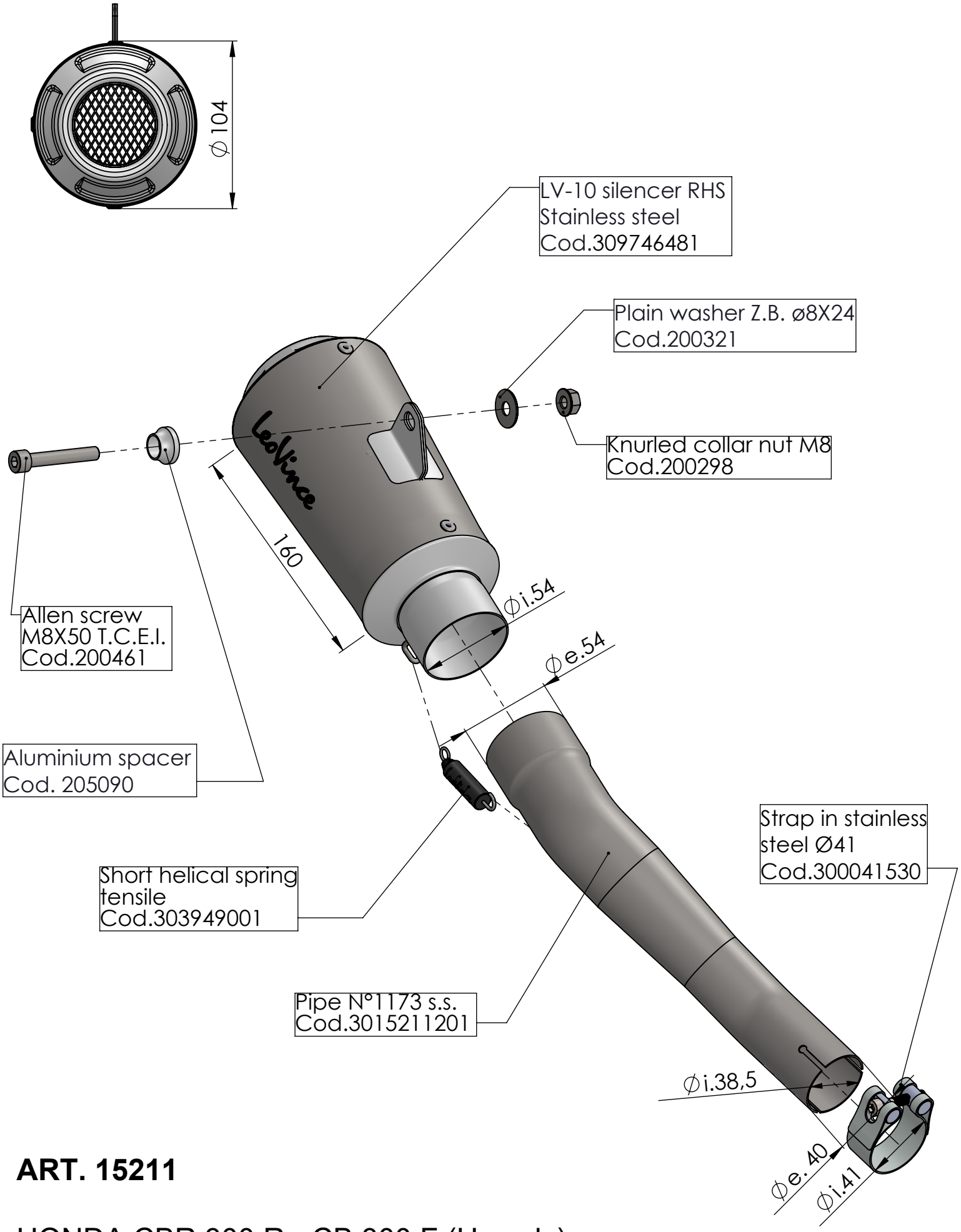

ART. 15211

HONDA CBR 300 R - CB 300 F (Us only)

SLIP-ON - LV-10 - STAINLESS STEEL