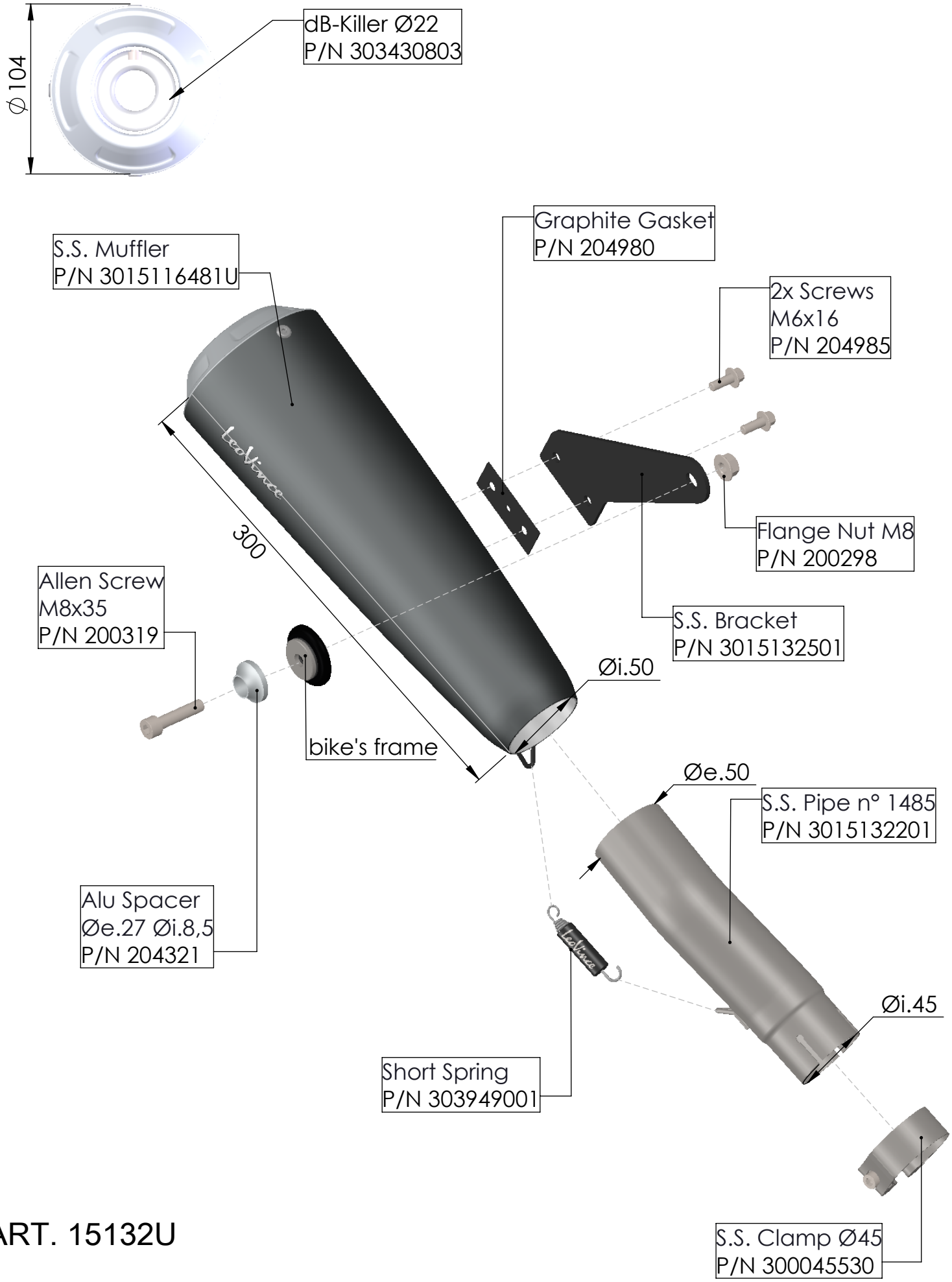

ART. 15132U

TRIUMPH SPEED 400 / SCRAMBLER 400 X

SLIP ON - GP ONE - STAINLESS STEEL