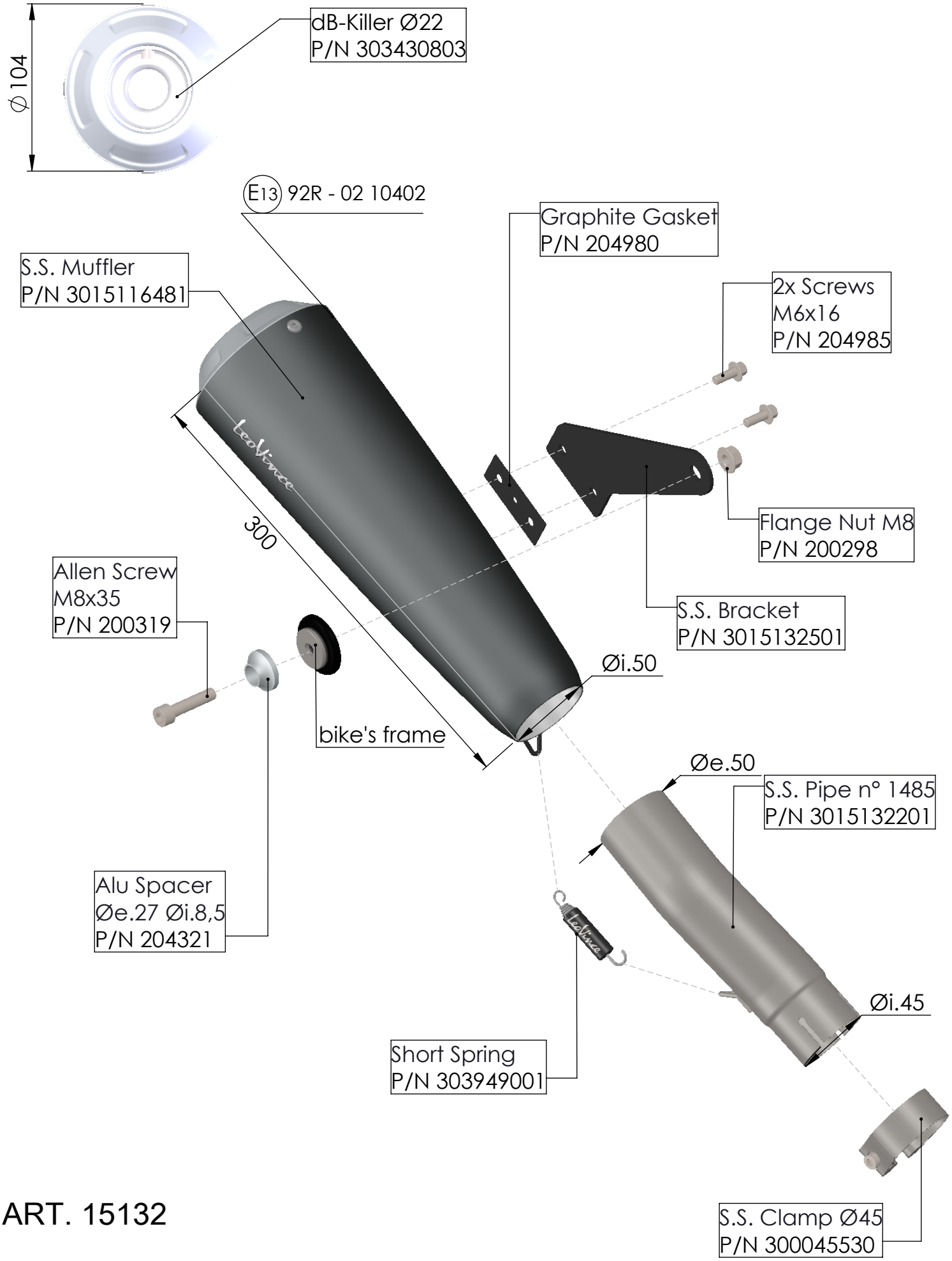

ART. 15132

TRIUMPH SPEED 400 / SCRAMBLER 400 X

SLIP ON - GP ONE - STAINLESS STEEL - APPROVED