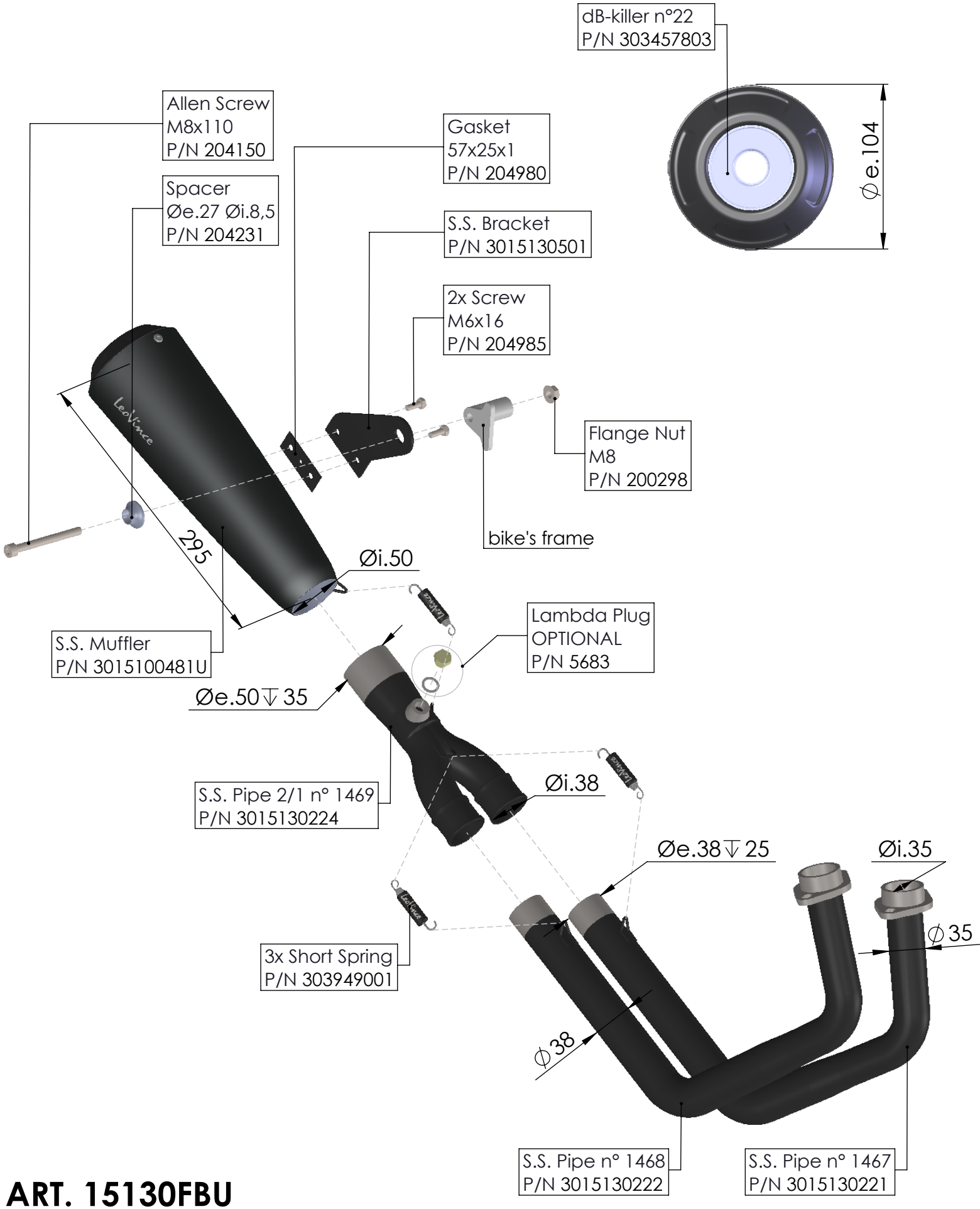

ART. 15130FBU

KAWASAKI VULCAN S 650

FULL SYSTEM GP ONE FULL BLACK