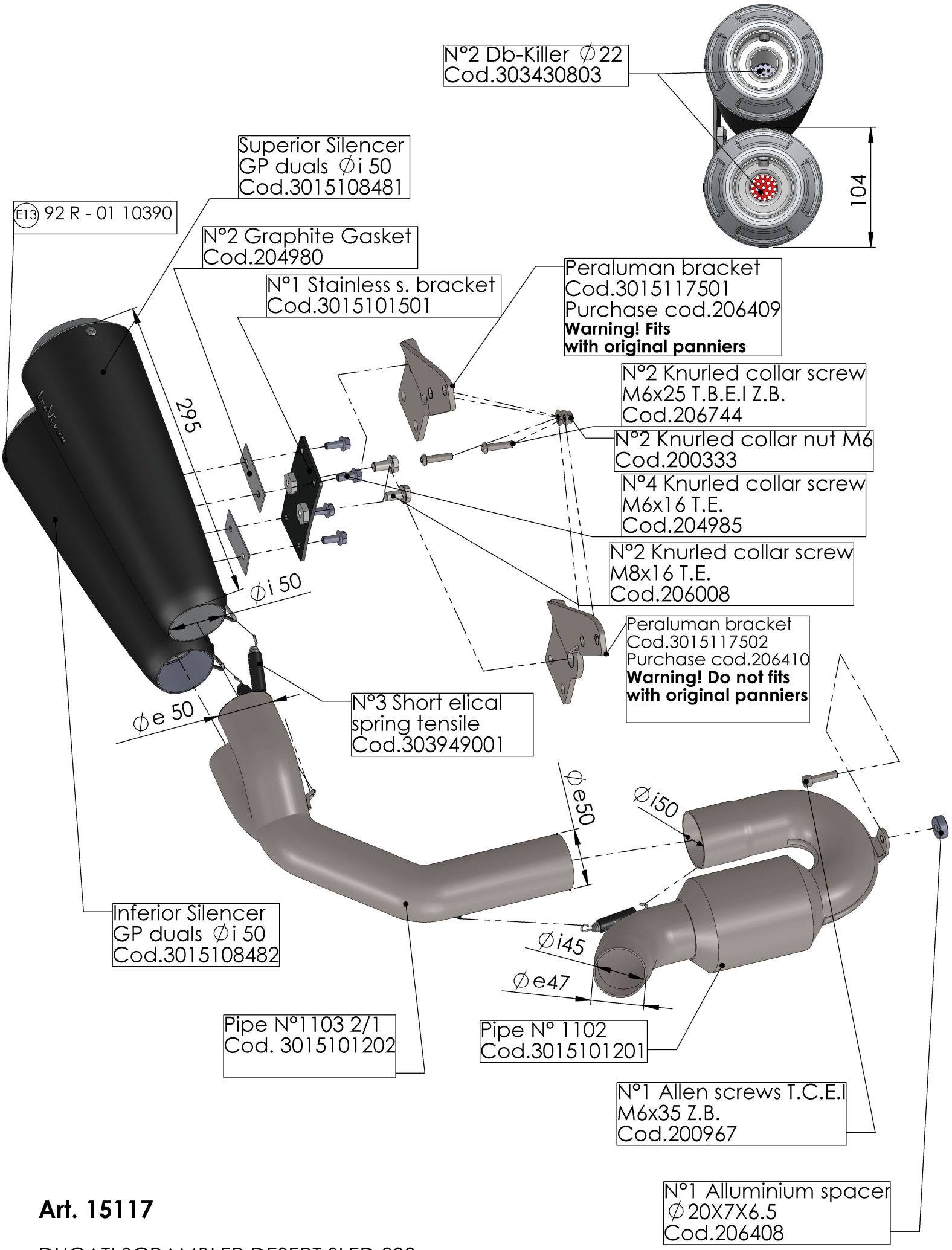

Art. 15117

DUCATI SCRAMBLER DESERT SLED 800

Slip-on - Gp dual - Racing