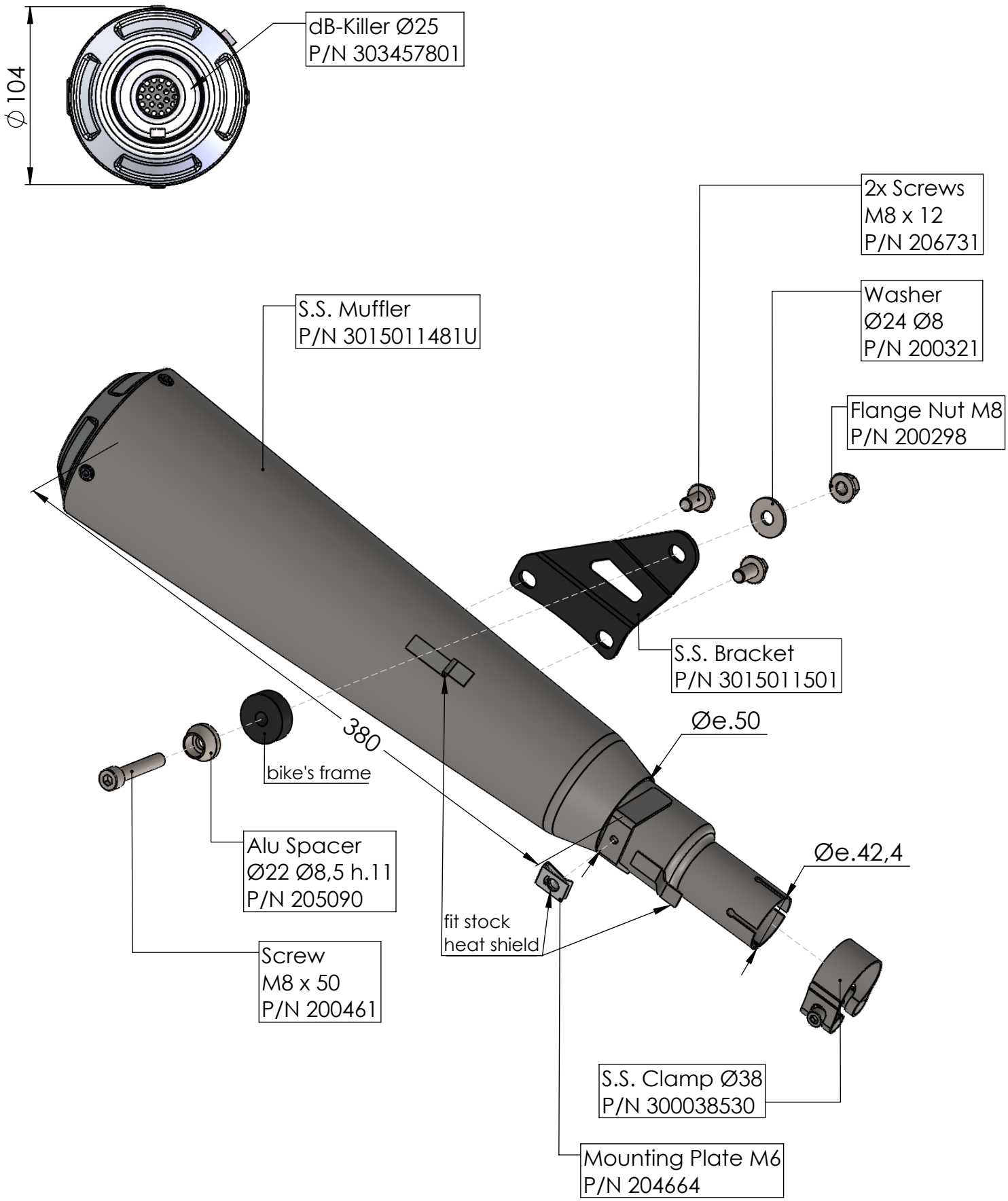

ART. 15011U

HONDA GB 350

SLIP-ON CLASSIC RACER STAINLESS STEEL