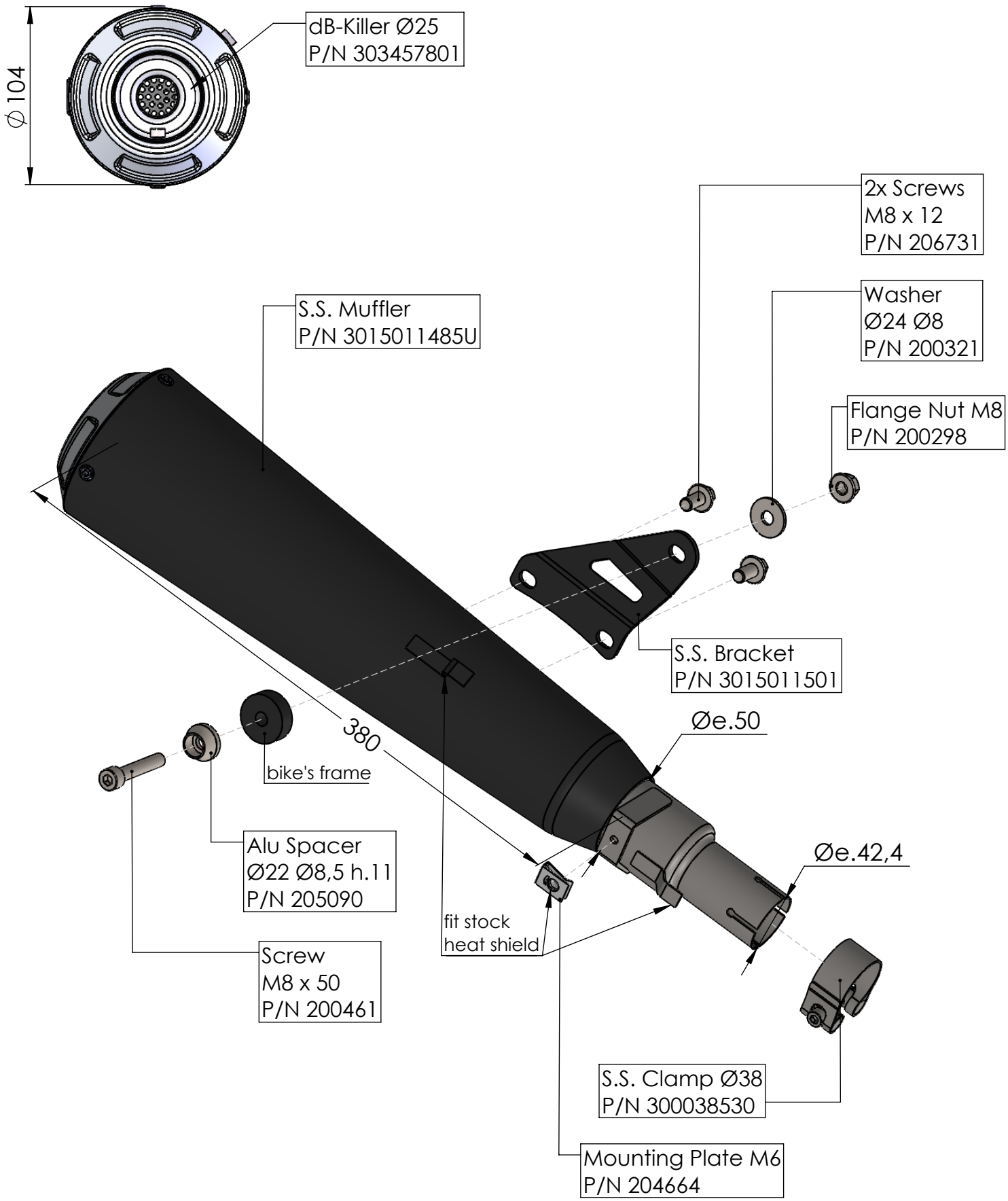

ART. 15011BU

HONDA GB 350

SLIP-ON CLASSIC RACER BLACK EDITION