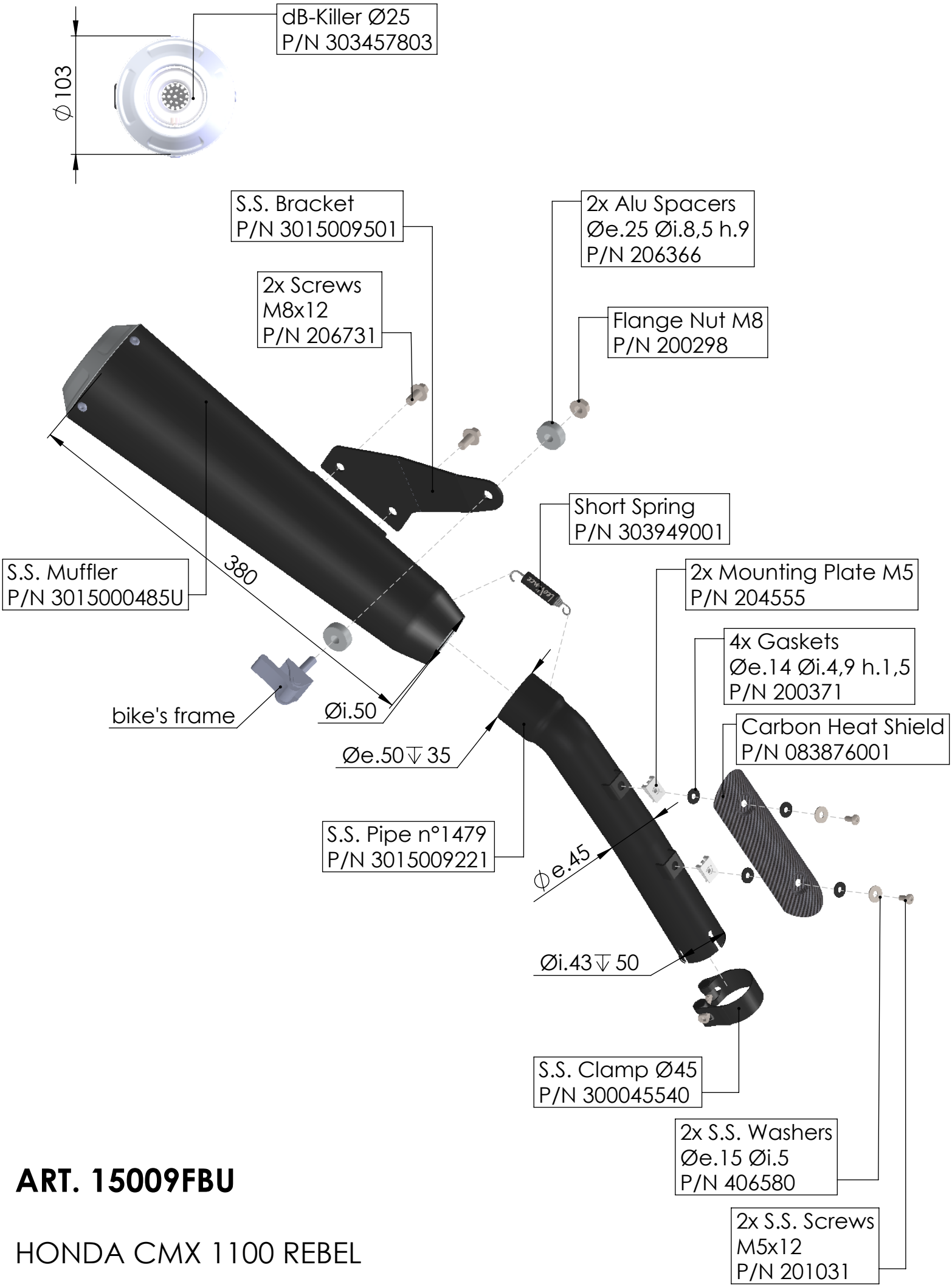

ART. 15009FBU

HONDA CMX 1100 REBEL

SLIP-ON CLASSIC RACER BLACK EDITION