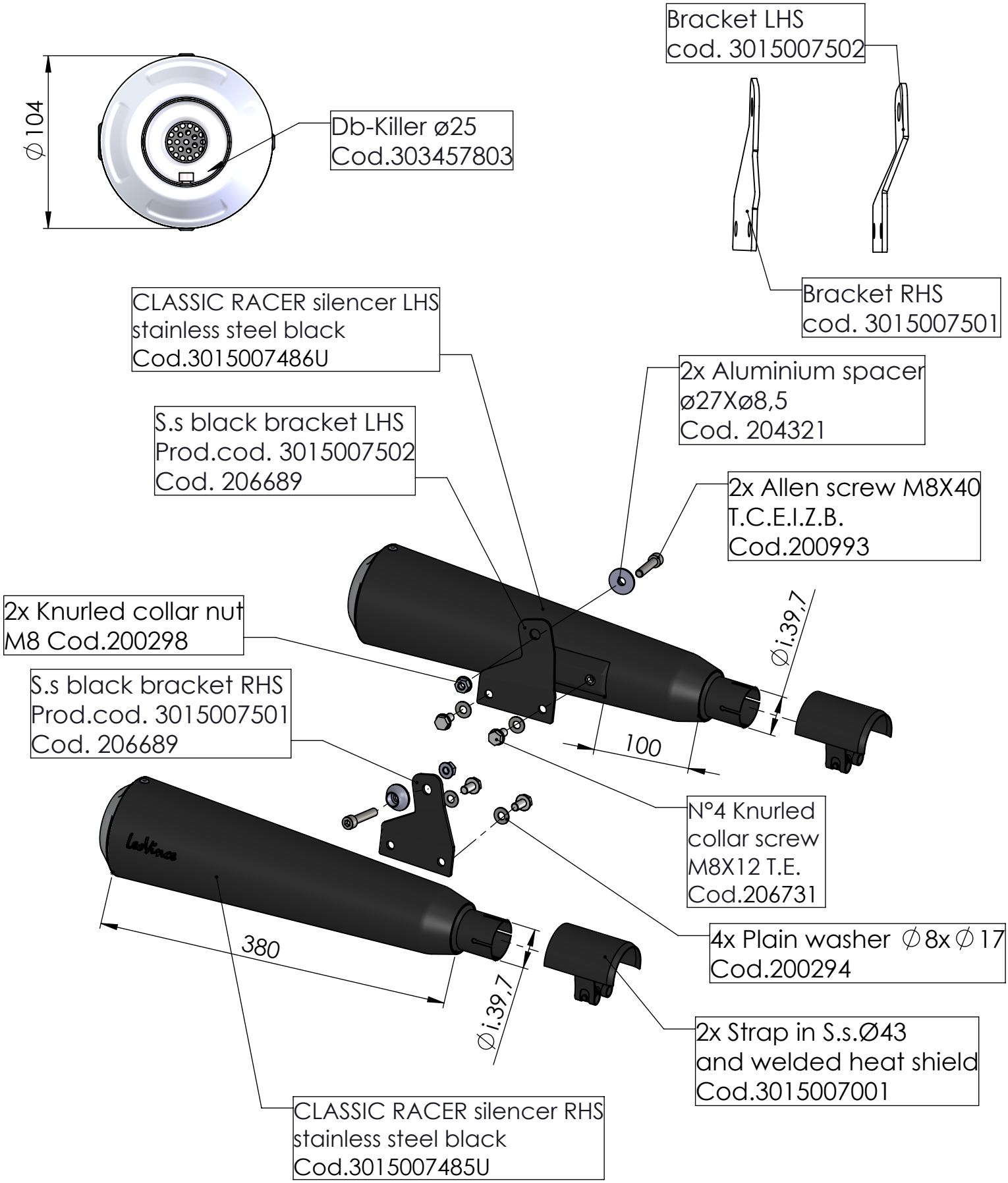

ART.15007BU

ROYAL ENFIELD CONTINENTAL GT 650 / INTERCEPTOR 650

SLIP-ON - CLASSIC RACER - BLACK