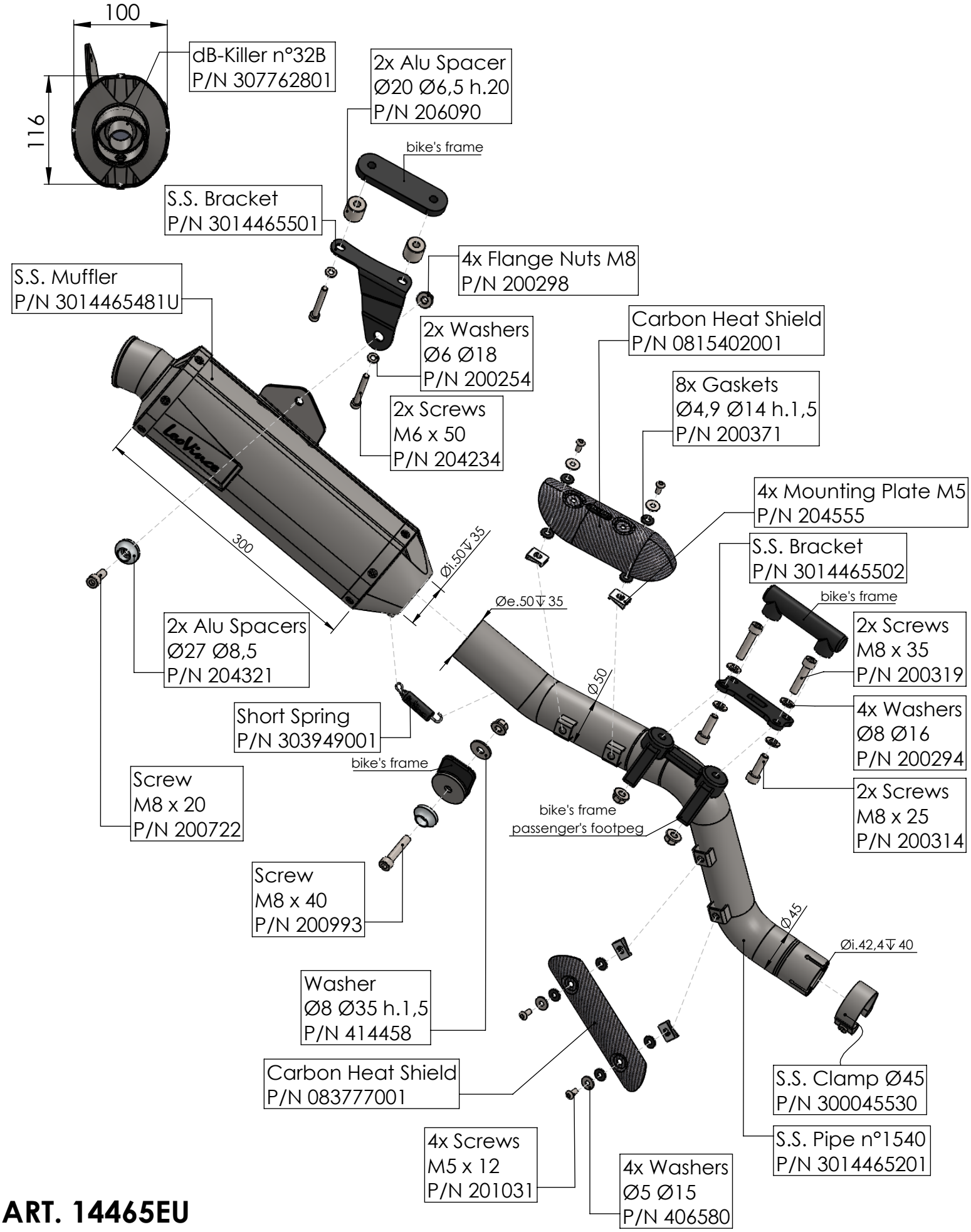

ART. 14465EU

YAMAHA TENERE' 700

SLIP-ON LV ONE STAINLESS STEEL