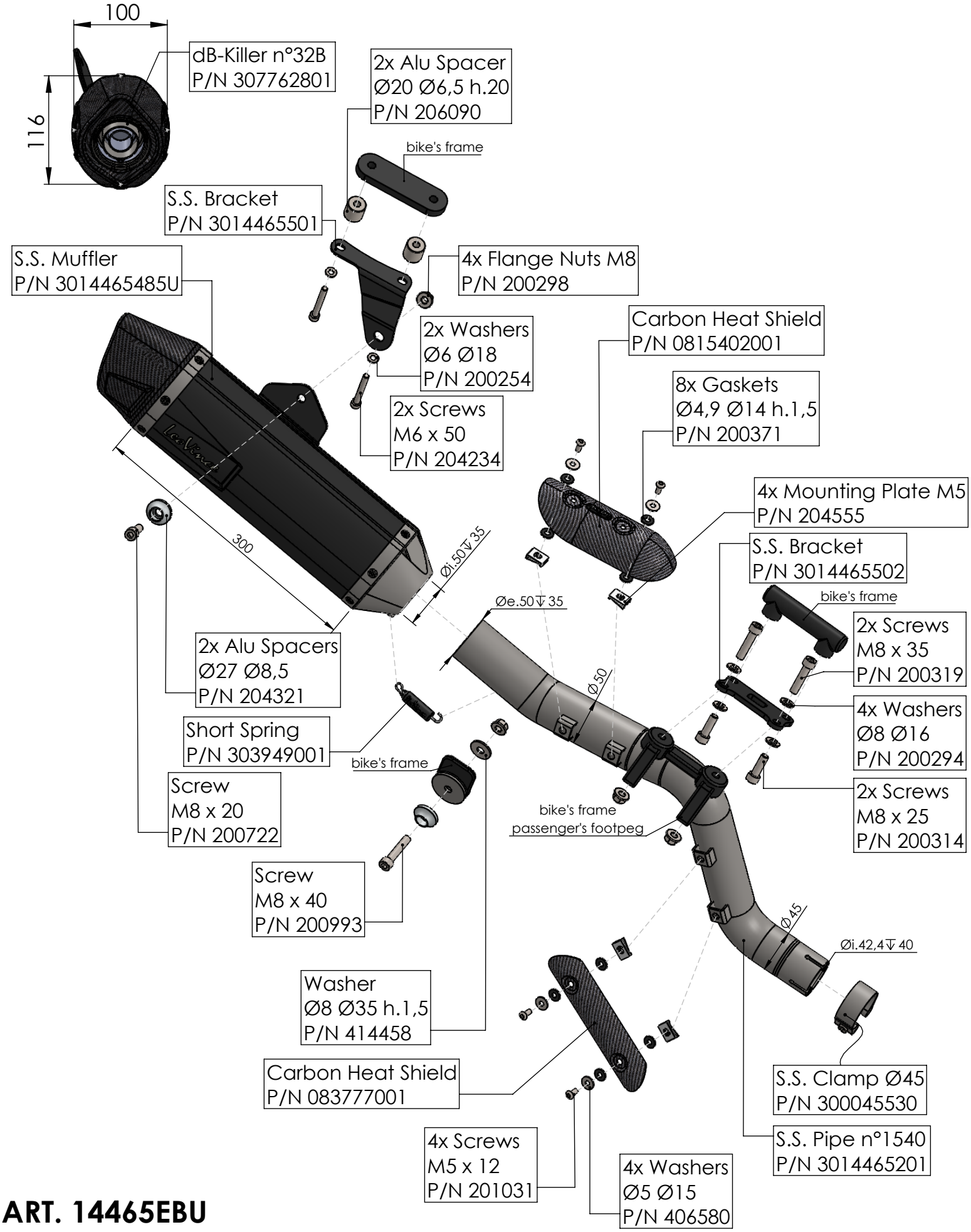

ART. 14465EBU

YAMAHA TENERE' 700

SLIP-ON LV ONE BLACK EDITION