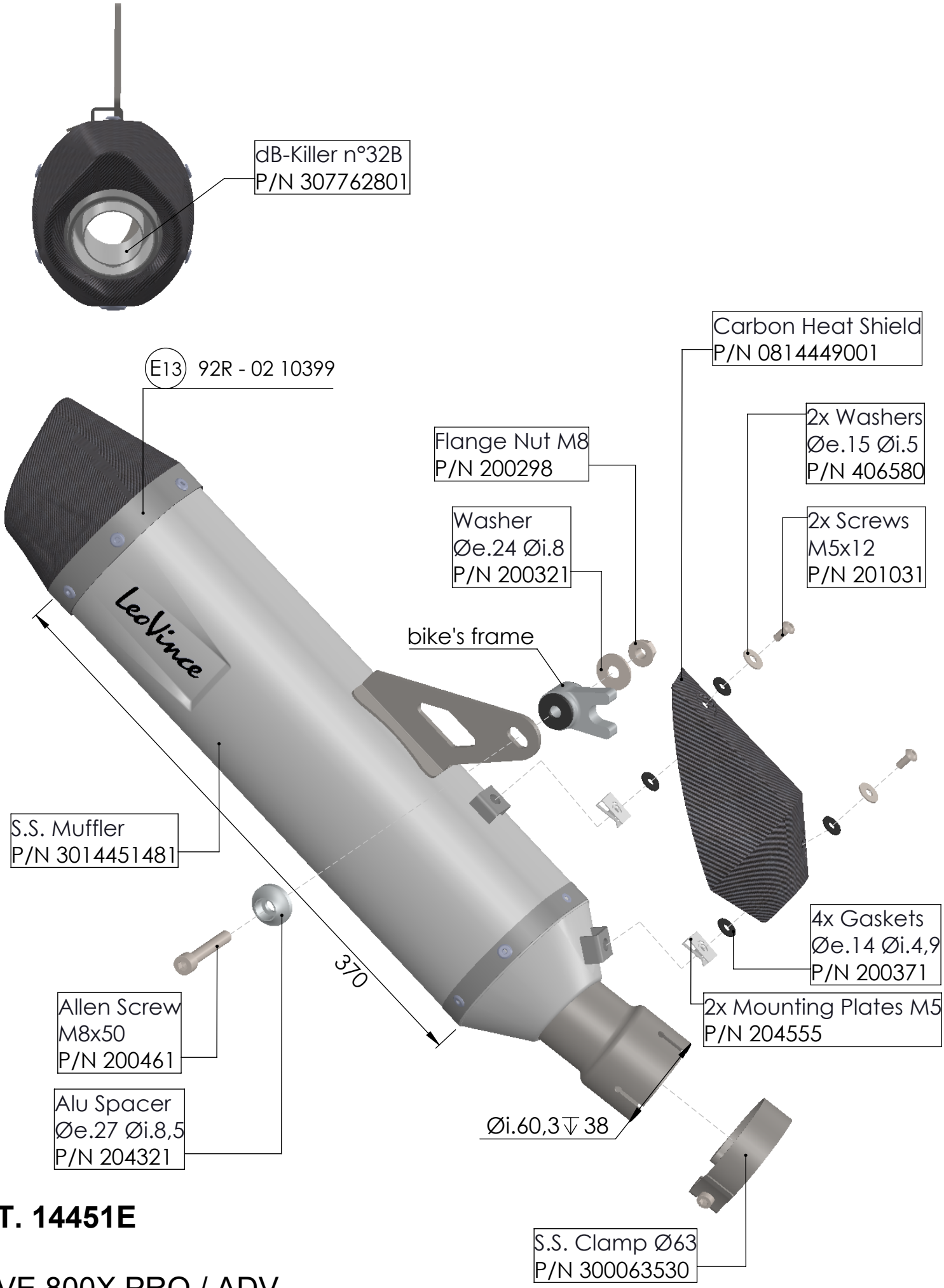

ART. 14451E

KOVE 800X PRO / ADV

SLIP ON - LV ONE EVO - STAINLESS STEEL - APPROVED