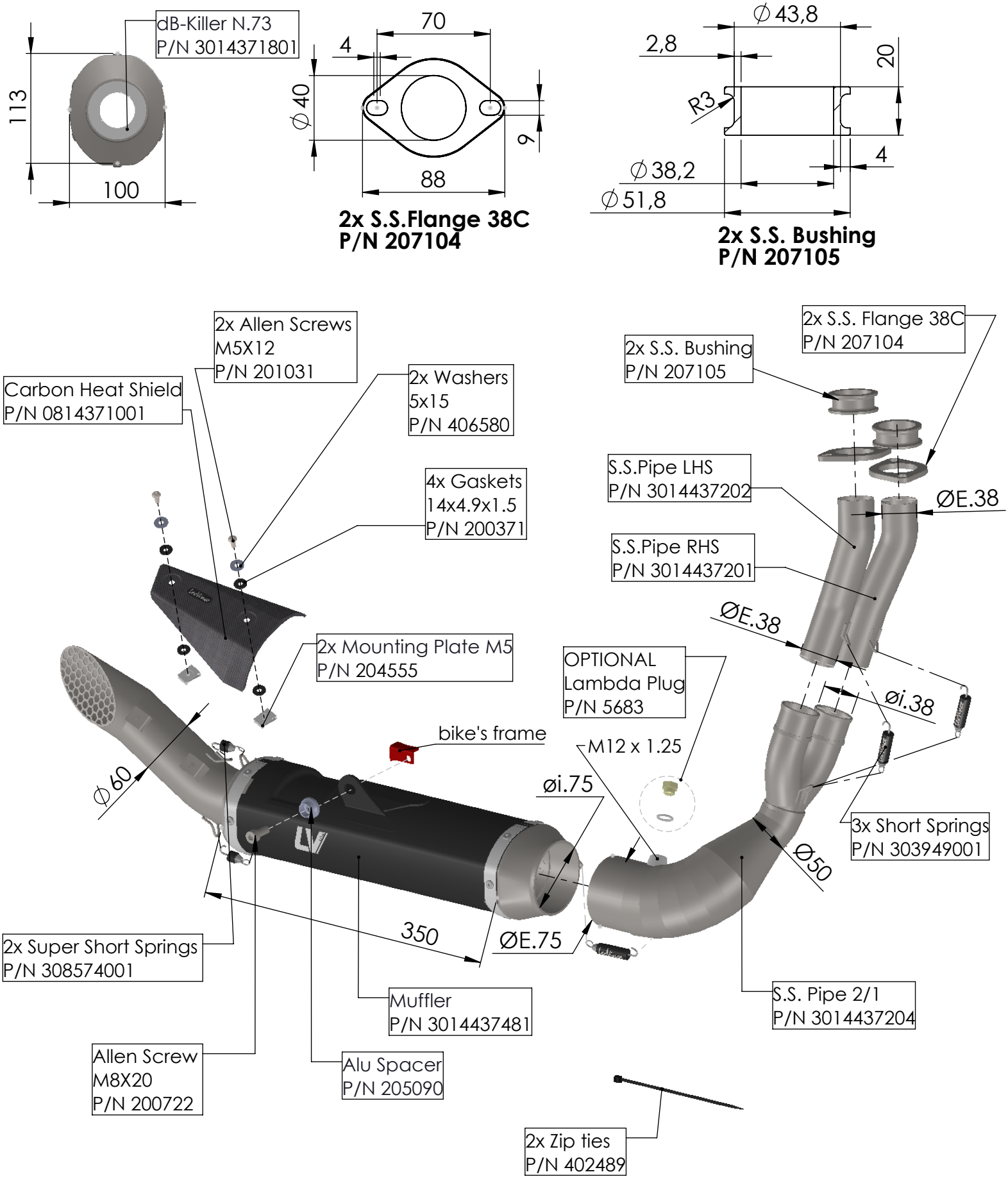

ART. 14437EB

HONDA CB 750 HORNET (also fits 35kW version)

FULL SYSTEM - LV RACE - STAINLESS STEEL