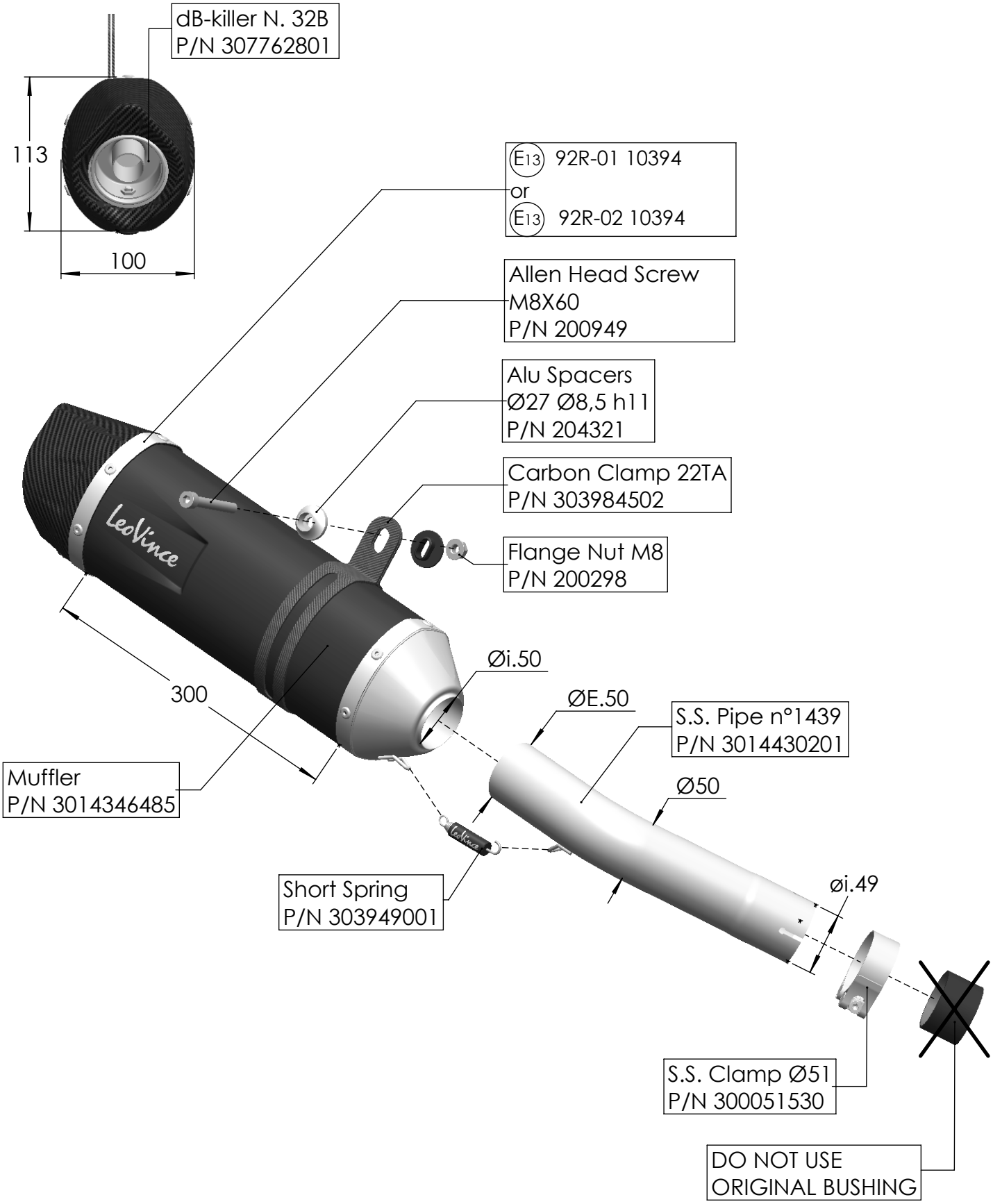

ART. 14430EB

HONDA CB750 HORNET - (also fits 35kW version)

SLIP-ON - LV ONE EVO - BLACK EDITION