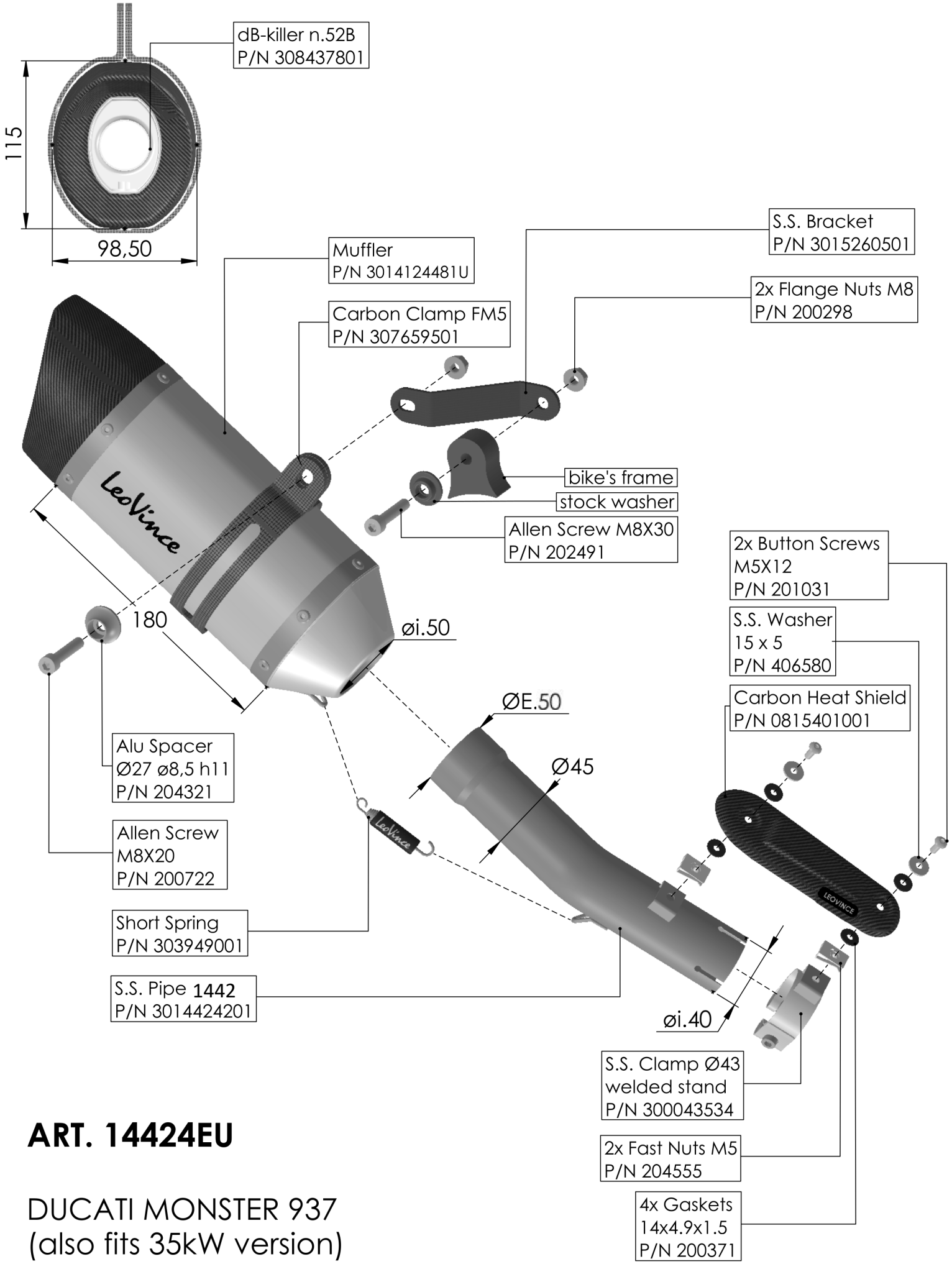

ART. 14424EU

DUCATI MONSTER 937
(also fits 35kW version)

SLIP-ON LV PRO STAINLESS STEEL