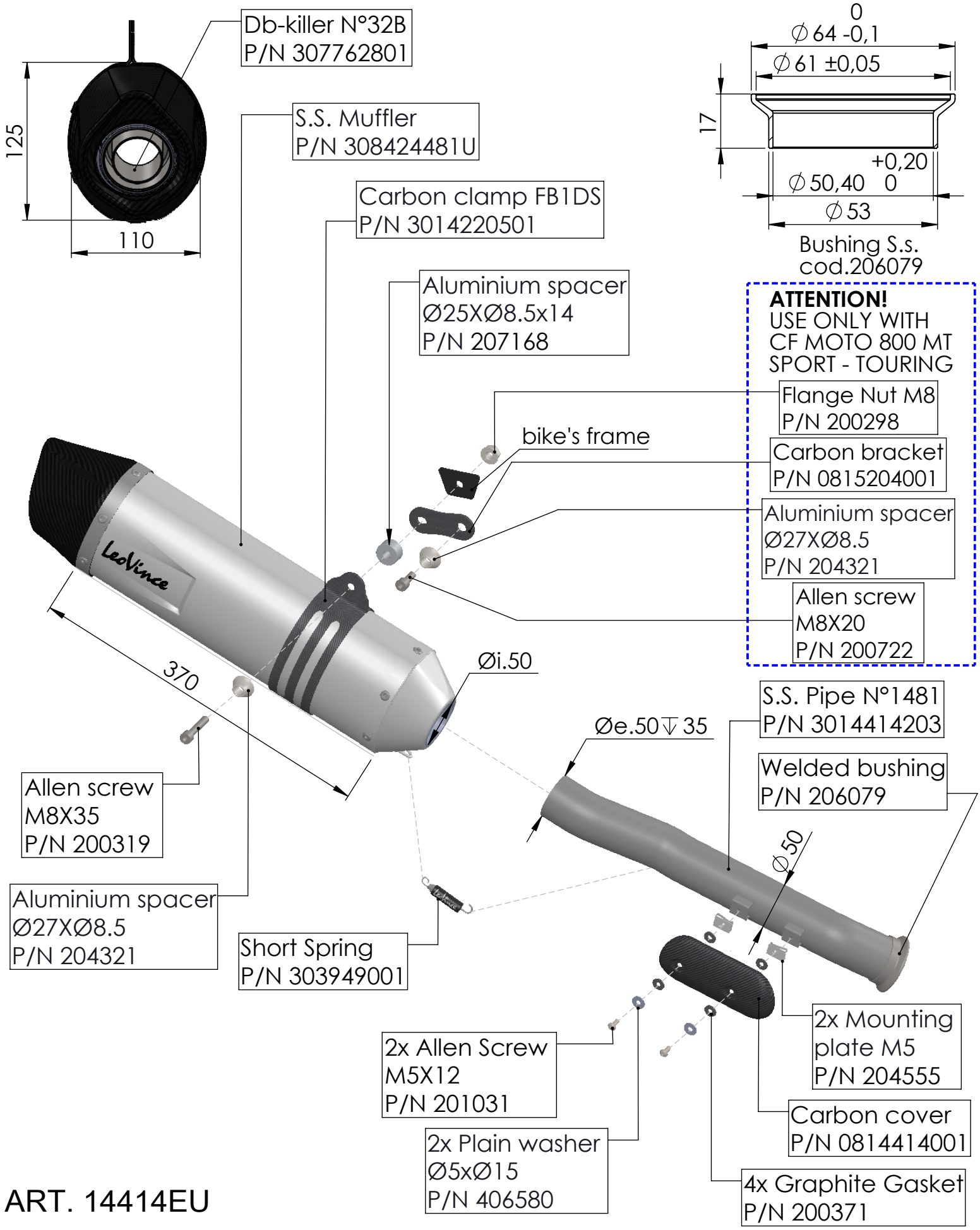

ART. 14414EU

CFMOTO 800MT SPORT/TOURING - HUSQVARNA NORDEN 901 - KTM 790 ADVENTURE / R - 890 ADVENTURE/L(A2)/R/RALLY - KTM 890 SMT (also fits 35Kw version)

SLIP ON - LV ONE EVO - STAINLESS STEEL