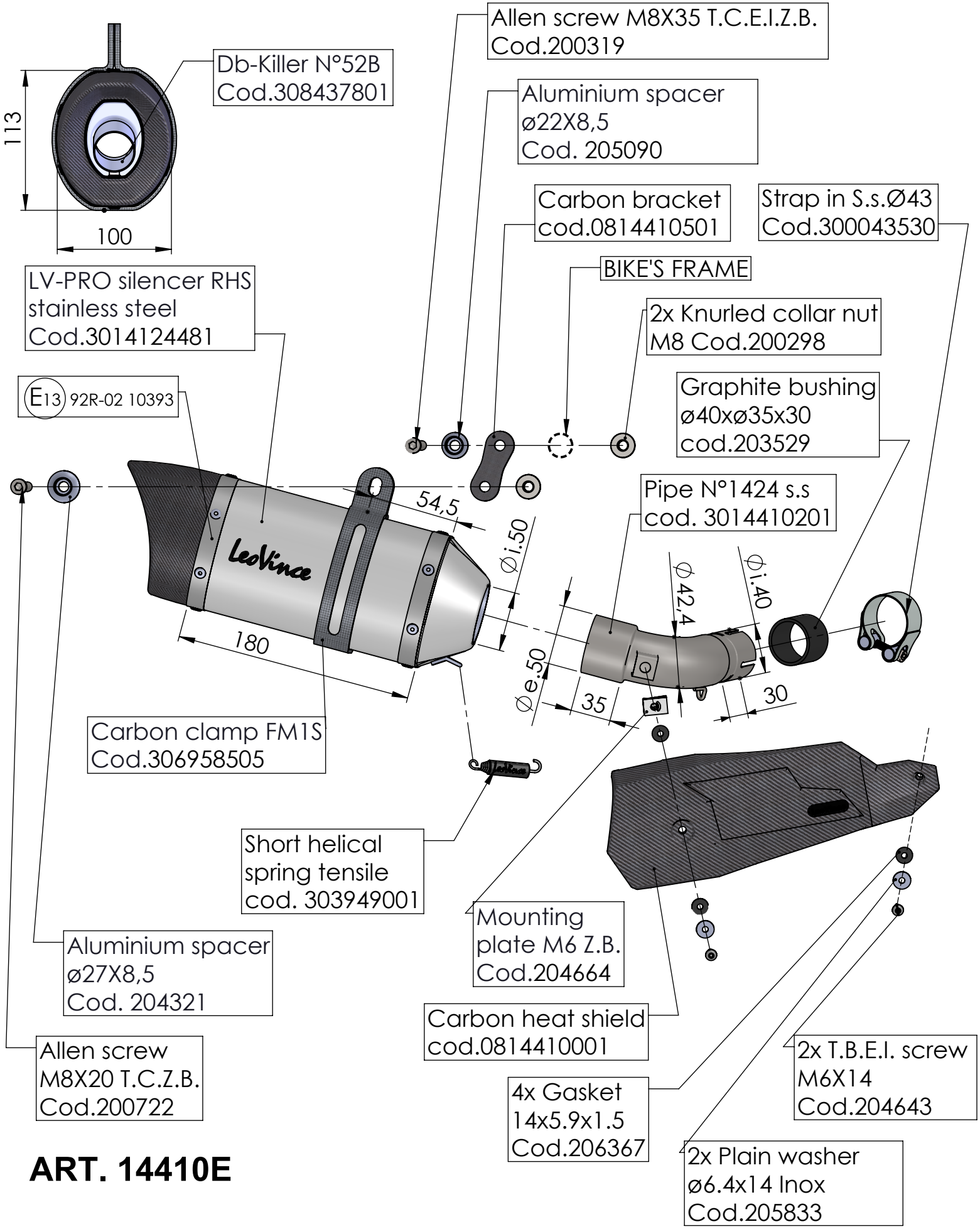


# ART. 14410E

MOTO MORINI X-CAPE 650 / A2
(also fits 35kW version) (Fits with original panniers)

SLIP-ON - LV-PRO - STAINLESS STEEL - APPROVED