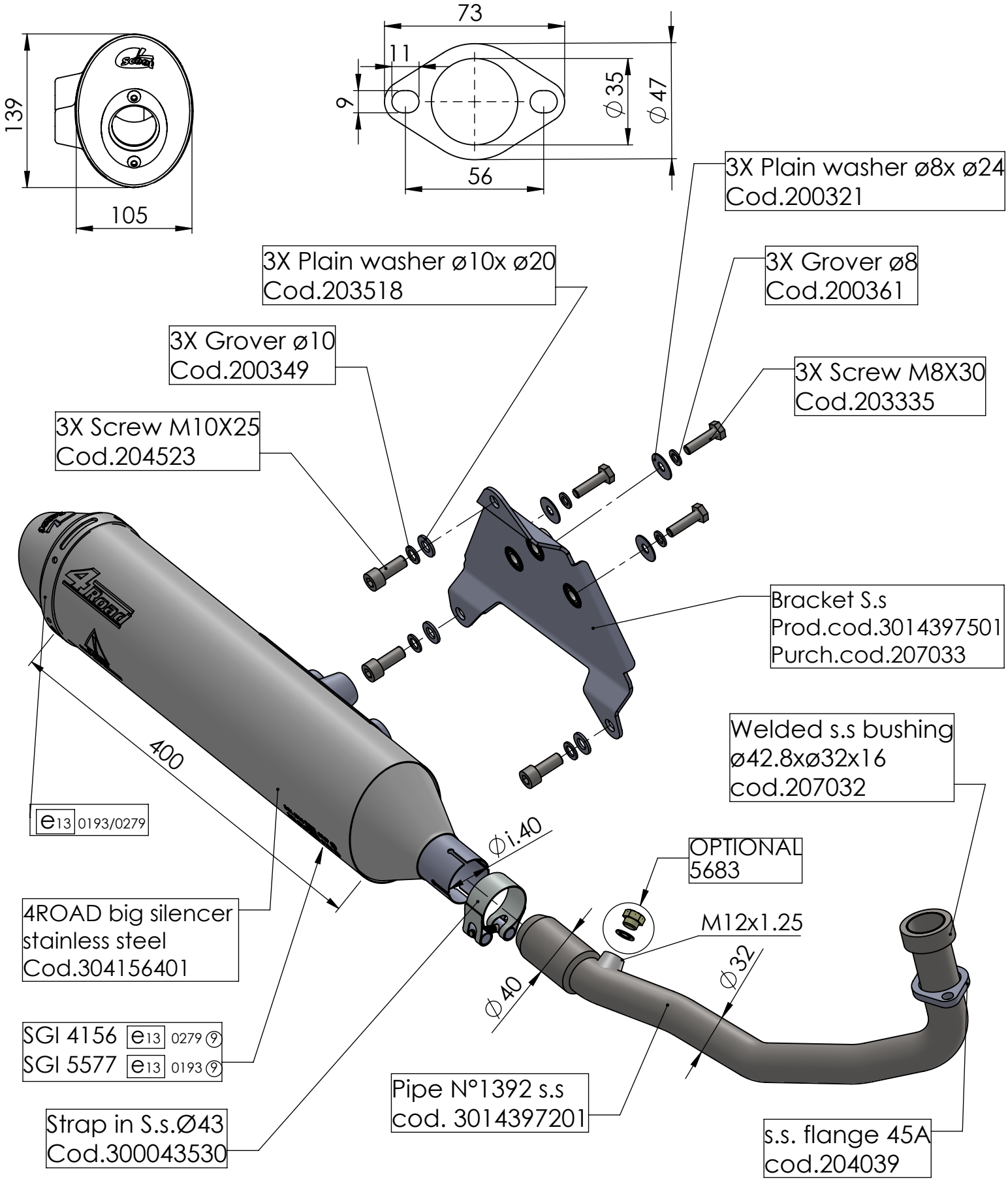

ART. 14397V

HONDA SH 350i

FULL SYSTEM - 4ROAD - STAINLESS STEEL