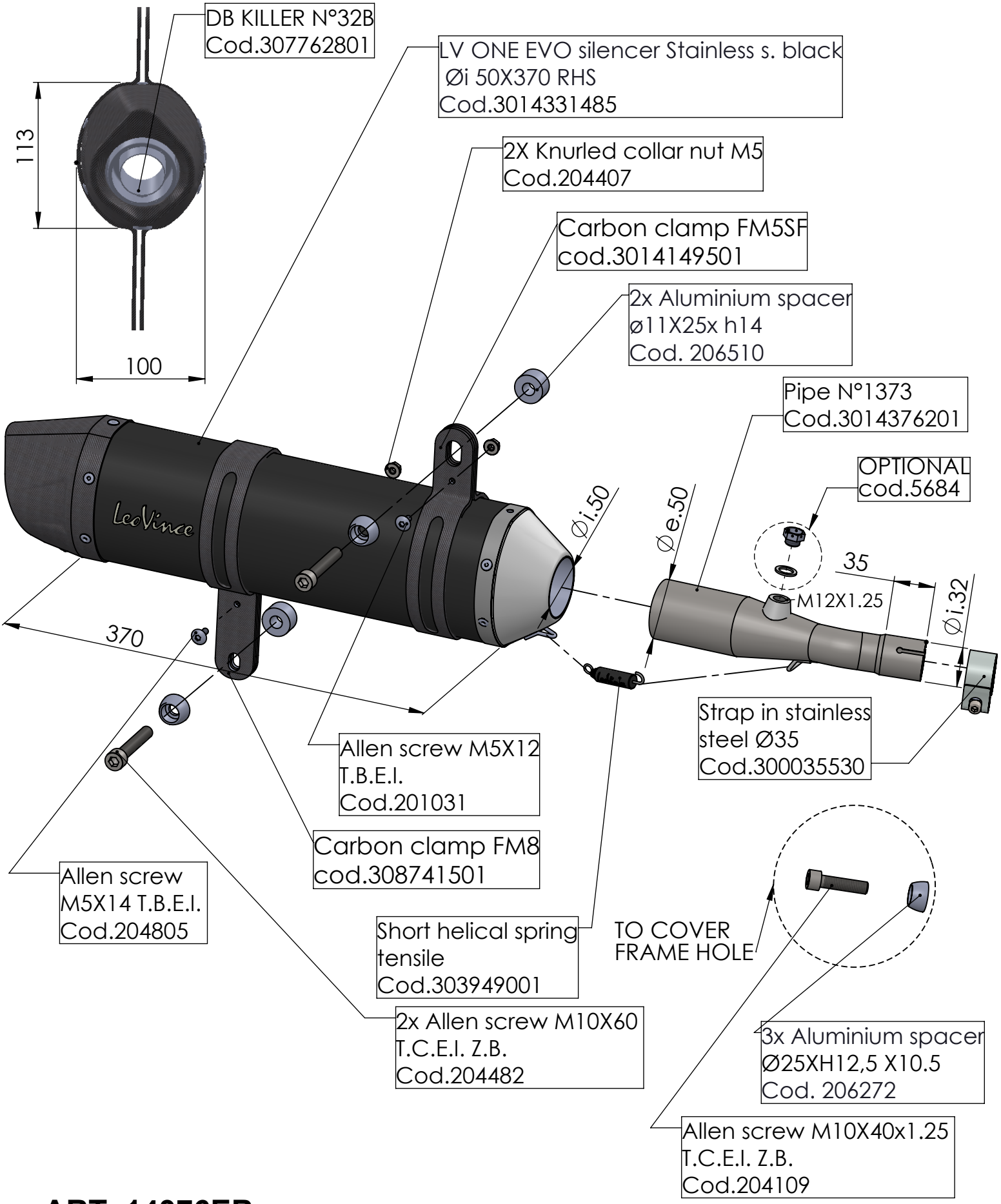

ART. 14376EB

YAMAHA X-MAX 300 / TECH MAX

SLIP-ON - LV ONE BLACK - STAINLESS STEEL BLACK