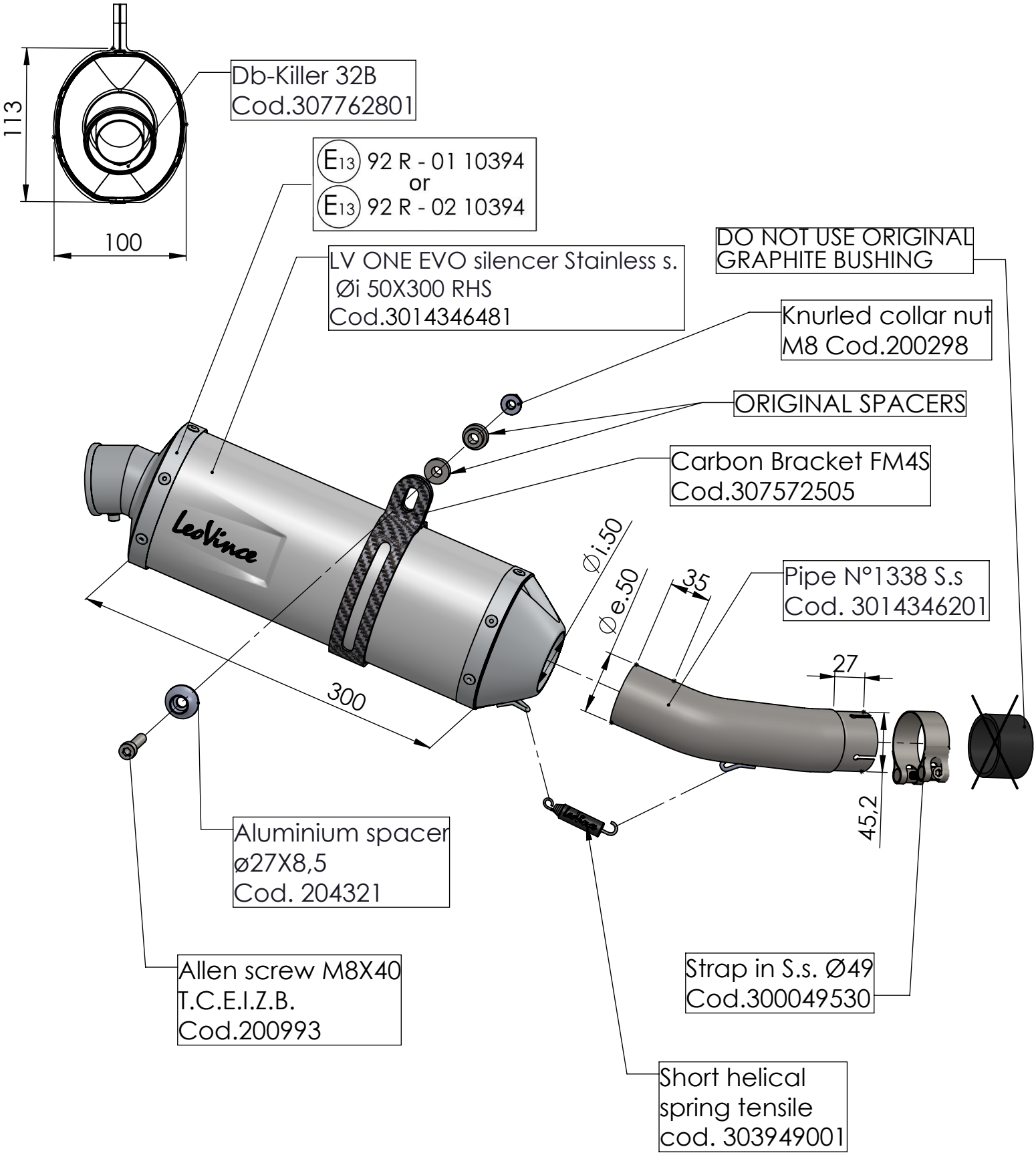

ART.14346E

KTM 390 ADVENTURE

SLIP-ON - LV ONE EVO - STAINLESS STEEL - APPROVED